DOWNLOAD MULTILINGUAL USER MANUAL

code.ironbaltic.com/u/G3oJVchd

ATV FRONT CUTTER

Code 92.1000

Version Rev02 (30012026)

Keep this manual for future reference!

If you need any spare parts, please send this packaging data to your local dealer or to Iron Baltic sales@ironbaltic.com

CONTENTS

EC DECLARATION OF CONFORMITY 4
INTRODUCTION 5
SAFETY INSTRUCTIONS 6
TRAINING 6
PROHIBITED ACTIONS 7
COMPULSORY TASKS 8
DEALING WITH EMERGENCIES 8
PERSONAL PROTECTIVE EQUIPMENT (PPE) REQUIREMENTS 9
SAFETY LABELS 10
PRODUCT DESCRIPTION 12
OPERATOR INSTRUCTIONS 13
PREPARATION 13
PRE-USE INSPECTION 13
OPERATION 14
LIFTING OPERATION 15
TRANSPORTATION ON A TRAILER 16
TRANSPORTATION POSITION AND OPERATING POSITION 17
CUTTING HEIGHT ADJUSTMENT 18
MOUNTING FRAME ANGLE ADJUSTMENT 19
MOUNTING FRAME DISTANCE ADJUSTMENT 19
SIDESHIFT 20
CLUTCH NEUTRAL POSITION AND OPERATING POSITION 21
MOWING TECHNOLOGY 22
STARTING THE ENGINE 23
OPERATING THE FRONT CUTTER 24
FORWARD SPEED 24
STOPPING THE FRONT CUTTER 24
MAINTENANCE 25
MAINTENANCE AND CLEANING 25
MAINTENANCE SCHEDULE 25
CUTTING BLADES REPLACEMENT 28
BELT REPLACEMENT 29
STORAGE 34
DISMOUNTING THE EQUIPMENT 34
STORAGE PROCESSES 34
STORAGE HAZARDS 34
TROUBLESHOOTING 35
UTILIZATION AND DISPOSAL 36
SPECIFICATION 37
FRONT CUTTER ASSEMBLING GUIDE 38
FRONT CUTTER ASSEMBLY 40
MOUNTING FRAME ASSEMBLY 49

Iron Baltic OÜ

EC DECLARATION OF CONFORMITY

Manufactured by:	Iron Baltic OÜ
Address:	Joa tee 17, Vääna 76903
Product:	**ATV Front Cutter**
Type	**10,5 hp**
Model:	**92.1000**

Hereby we confirm that this product is in conformity with the requirements of Directive **2006/42/EC,** applicable to the safety and functionality of machinery, regarding the replaceable equipment and it is in compliance with the standard **EN12100** Safety of machinery – General principles for design – Risk assessment and risk reduction.

In witness whereof CE marking is attached to the product.

Place and date of issue of the declaration: 21.03.2024

.....
Tiit Norak
Member of the Board

Iron Baltic OÜ
Joa tee 17
Vääna 76903
Estonia

tel (+372) 6533711
info@ironbaltic.ee
www.ironbaltic.com

INTRODUCTION

Thank you for choosing Iron Baltic product. This manual contains the technical details of the front cutter and instructions how to assemble, operate and maintain the product safely. Unnecessary use of the product can result economic damage and personal injury, so it is very important that the person who is using the product read and use this manual in accordance with the requirements. Any misuse of the product will release the manufacturer from liability for any damage or expense incurred.

NOTE: Photos and drawings in this manual may not necessarily depict the actual models of front cutter or their accessories. They are merely given as a frame of reference and are based on the latest available information at the time of publication.

This symbol is used throughout the manual and on warning signs in order to warn users of the possibility of serious injury. Before using the vehicle and the front cutter, carefully read the safety instructions and make sure that you have understood them. If there are any misunderstandigs or questions about the manual or the machine, contact the retailer or manufacturer. Follow all instructions and ensure that everyone who uses the equipment follows them!

Keep this manual for future reference.
The user manual must be reread every 6 months, even if you are a daily user of the machine.

Based on the specifications for your model, please check that you have received all of the parts for your particular set.

SAFETY INSTRUCTIONS

Most accidents occur due to negligence or carelessness. Avoid unnecessary accidents and follow the safety instructions given below.
The combination of an ATV and attached front cutter creates an elongated working machine, which is difficult to maneuver, making work challenging in small and narrow areas.

DEFINITION

In this manual, the terms “left” and “right” designate directions when sitting on the driver’s seat in a forward-facing position.

TRAINING

1. Read the safety instructions and terms and conditions of use carefully. Learn how to stop the equipment and deactivate the controls fast.
2. If possible, two operators should always be present. When a serious accident happens, supervising operator is able to call for help if necessary.
3. If an accident occurs, immediately contact emergency services to get essential assistance and avoid panic (see page 8).
4. ATVs which are equipped with a CVT decelerate quickly without throttle, increasing the risk of instability when a front cutter is attached. The operator must be aware of this risk and take necessary precautions to maintain control.
5. Never allow adults to use the vehicle or the front cutter unless they have received appropriate instruction.
6. Never allow children to use the vehicle or the front cutter. Children may accidentally or deliberately push the buttons/levers which could start the vehicle or front cutter.
7. Front cutter operator must be sufficiently experienced and qualified. The minimum age for operator is 18. Operator who is not sufficiently experienced, too young or too old may cause accidents.
8. Operators and nearby people must wear personal protective equipment (PPE).
9. Make sure that there are no persons, especially children or animals in the equipment’s operating area (danger zone). Children/bystanders/operators/animals may be near the machine and could get hit with a piece of wood, dirt, stone or grass (or other material).
10. During operation of the front cutter, only the operator may sit on the vehicle. Sitting/riding/standing on the parts of the front cutter is not allowed. If the operator allows a child or adult to sit in their lap or on the machine during operation, there’s a risk of them falling off and being run over by the vehicle/front cutter.
11. Operator must be aware of the surrounding environment. Smartphones or any other distracting equipment must not be used during work.
12. Working outdoors or in nature may lead to (wild) animal encounters/attacks. Bug/insect repellent should be used. Some climates may require vaccinations.
13. Operator should avoid unsuitable conditions (stormy, windy, too dark, too hot, too cold etc). Protective measures for sun exposure and warm weather should be taken.
14. Operating a front cutter should be done in suitable environments (clear weather, calm conditions without wind, adequate lighting, moderate climate).
15. Cutting process generates heat. Very dry and hot weather may cause the dried ground to ignite. Fire extinguisher should be available close by.
16. During handling of the machine for a long period the operator may encounter unergonomic positions. Rest breaks should be taken regularly.

PROHIBITED ACTIONS

- Never use the front cutter before you have carefully read the entire user manual.
- Never use the front cutter unless all protective parts are correctly installed.
- Never use the machine for purposes not meant for it.
- Never modify the engine without the manufacturer's written approval.
- Never touch any moving or rotating parts during the operation of the front cutter.
- Never stop the engine immediately after heavy use. Let the engine run in a stationary position for a little while.
- Never use the front cutter without wearing proper protective clothing, hearing protection, protective goggles, or anti-slip footwear.
- Never give anybody a ride on the front cutter.
- Never leave an working front cutter unattended.
- Never leave unattended children around the machinery. They may attempt to operate or start the vehicle, causing it to move unexpectedly. Controls/handlebars are foreign and they do not know how to stop the vehicle.
- Never let children play around machinery. They may play/climb on top of and around the vehicle/front cutter and accidentally or deliberately push the buttons/levers that could start the vehicle/front cutter.
- Never fill the equipment when the engine is running or hot.
- Never fill the fuel tank indoors.
- Never allow the engine to run in an enclosed room as gases emitted from the exhaust contain carbon monoxide, which is lethal when inhaled.
- Never use the front cutter on very steep slopes. This may cause sudden sinking or rollover of the vehicle.
- Never use the front cutter unless all safety elements have been installed and are being used correctly.
- Never wear baggy/oversize clothing that might become entangled in the machine's moving parts.
- Never leave hair untied when handling machine. Always tie up any loose or long hair.
- Never attempt to remove obstacles with the engine running. Before cleaning the front cutter, make sure that the engine has been switched off and the rotating parts have stopped completely.
- Never use the front cutter in the dark, unless you are using artificial lighting.
- Never use the front cutter when excessive vibration is being experienced. Instead, stop the front cutter immediately and find out the reason behind the fault.
- Never use the machine in the event of a leaks.
- Never climb on top of the front cutter.
- Never modify the accessories or any parts without the manufacturer's written approval.
- Never smoke a cigarette (or similar). Accidentally dropping a cigarette on the ground could cause a fire.
- Never operate the machine under the influence of alcohol, medication, or other psychotropic substances that may affect perception or reactions.
- Never ride the front cutter on public roads.

IF SOMETHING HAPPENS DURING THE WORK THAT COULD DAMAGE THE PRODUCT, AN INSPECTION OF THE DEVICE MUST BE CARRIED OUT TO IDENTIFY POSSIBLE DAMAGE. DAMAGE (CRACKS IN CONSTRUCTION OR WELDS, DEFORMED PARTS) CAN ENDANGER PROPERTY AND HUMAN HEALTH. THE DEVICE MUST NOT BE USED BEFORE THE DAMAGE IS REMOVED.

COMPULSORY TASKS

- Read and follow the engine manufacturer’s user manual.
- Make sure that every bystander is at a safe distance when operating the front cutter.
- Pre-use inspection must be carried out (see page 13).
- Maintain the front cutter regularly and check it before every use.
- Clean the operating area of possibly hazardous objects.
- Slow down the speed when working on a slope or on an uneven surface.
- Follow every instruction given by the ATV’s manufacturer.
- Bear in mind that the front cutter’s parts may be hot after the machine has been in use.
- Be careful when filling fuel to the front cutter, especially if engine components are hot.
- Handle fuel with caution, bearing in mind that it is highly flammable.
- Only use approved fuel containers.
- If fuel is splashed onto your clothing, you must change into other clothes.
- Always use protective equipment that has been designed for every type of product (goggles, hearing protection, protective clothing, anti-slip footwear, etc.).
- The safe road-steadiness of the vehicle must always be ensured by using the correct accessories for the task in hand (chains, counterbalances, etc.).
- Always make sure that every component has been correctly installed.
- Always wear thick leather gloves when handling the winch rope.
- Make sure that all safety stickers are in a good condition. Replace damaged stickers if required.
- Keep your hands and feet away from the rotating area.
- Before transporting the front cutter, make sure that it is in transportation position.

DEALING WITH EMERGENCIES

- If an emergency occurs, immediately stop the front cutter by pressing the stop button (see page 23) and turn off the ATV's engine.
- Assess the situation. Quickly assess the situation and determine the nature, severity, and location of the hazard.
- If the situation requires professional assistance, contact emergency services immediately. Provide clear and precise information about the location, nature of the emergency, and any injuries or risks involved.
- Administer basic first aid if qualified. Do not attempt advanced medical procedures unless trained to do so.
- Regularly inspect for any signs of fuel leaks or electrical issues. Ensure that all electrical components are properly insulated and protected.
- Keep flammable materials away from the machine and ensure proper storage. If a fire starts, use a fire extinguisher suitable for the type of fire and evacuate the area immediately. Call the fire department.
- Report any chemical spills to the appropriate authorities and seek guidance on containment and cleanup procedures. In the case of a chemical spill, use personal protective equipment.
- Record details of the emergency, including the cause, actions taken, and any damage or injuries. This information can be vital for future prevention and insurance claims.
- After the incident, review the response to identify any improvements in emergency procedures.

PERSONAL PROTECTIVE EQUIPMENT (PPE) REQUIREMENTS

Personal protective equipment (PPE) is equipment worn to minimize exposure to hazards that cause serious workplace injuries and illnesses. This section provides an overview of the types of PPE necessary when operating an ATV with a front cutter.

1) Head protection- operators must wear helmet that protects the head from impacts and shields the face from flying debris.
2) Eye protection- operators must ensure that the helmet visor provides adequate protection. Bystanders outside or near the danger zone must wear safety goggles or a full-face shield.
3) Hearing protection- operators and bystanders must wear hearing protection to protect against harmful noise levels.
4) Hand protection- operators must wear heavy-duty work gloves which protects hands from cuts, abrasions, and vibrations while ensuring a secure grip on controls.
5) Foot protection- operators must wear steel-toe or reinforced boots with anti-slip soles. These boots shield feet from heavy objects, sharp debris, and potential impacts, while the anti-slip soles help prevent slipping on wet or uneven surfaces.
6) Body protection- operators must wear long-sleeved protective clothing and a high-visibility vest. This clothing protects the body from debris and enhances visibility in various working conditions. It should be durable and resistant to cuts and abrasions.

Noise levels are controlled according to Directive 2000/14/EC, with a maximum measured noise level of 98 dB. The minimum requirements for hearing protection are a **Class rating of Class A/AL, Class 3 or higher.** Choosing the right class ensures that the hearing protection provides adequate attenuation for the noise levels encountered in a specific environment.
Additionally, vibrations are lowered as much as possible with the design of the front cutter. Depending of ATV, the estimated vibration levels of the ATV may be higher than the front cutter. Refer to the ATV manufacturer's user manual.

Regular inspection and maintenance of PPE are crucial to ensure its effectiveness. Operators should check PPE before each use for signs of wear or damage and replace any PPE that does not meet safety standards.

Proper training on the use of PPE is essential for all operators. Operators must be familiar with the correct use of each piece of equipment and understand the importance of adhering to PPE guidelines.

SAFETY LABELS

Safety labels must be placed on your ATV front cutter. If any of these stickers is missing from your vehicle or has been damaged, contact the front cutter's distributor so that any missing stickers can be replaced before the equipment is used.

Meanings for safety labels

1		Read the instructions given in the user's manual in relation to the wearing of protective clothing, protective gloves, goggles, hearing protection, protective footwear, or a helmet.
2		Keep your body parts and clothing away from rotating parts while the engine is running! Always make sure that there are no people or obstacles in the operating area! Never attempt to remove obstacles with the engine running! Before cleaning the front cutter, make sure that the engine has stopped and that the rotor has stopped rotating.
3		Danger area! Always make sure that there are no persons, objects or obstacles in the operating area; stop work immediately when danger is present!
4		Keep your hands away from rotating parts while the engine is running. Never attempt to remove obstacles with the engine running! Before cleaning the front cutter, make sure that the engine has stopped and that the rotor has stopped rotating.
5		Never attempt to perform any adjustment, repair, cleaning or maintenance work while the engine is running. When work has been completed, stop the engine, lower the front cutter, set the gears to neutral, activate the parking brake, and remove the ignition key.
6		Before installation or use, read the user's manual and make sure that you have understood everything correctly.
7		Danger area! Risk of collision! In order to ensure safety, consider the dimensions, operating area and moving speed of the front cutter.

8		Smoking is not allowed near the front cutter and its surroundings!
9		Keep your body parts and clothing away from rotating parts while the engine is running. Never attempt to install or remove the driving belt without reading the user's manual.
10		Caution, dangerously hot! Keep away from hot parts!
11	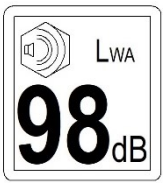	Sound power level mark - indicates the guaranteed decibel level for the product, meeting Directive 2000/14/EC requirements.
12	CE	CE mark - conforms with all of the essential safety and functionality standards.
13		QR code - scan this QR code to access the latest updates and details about the front cutter.

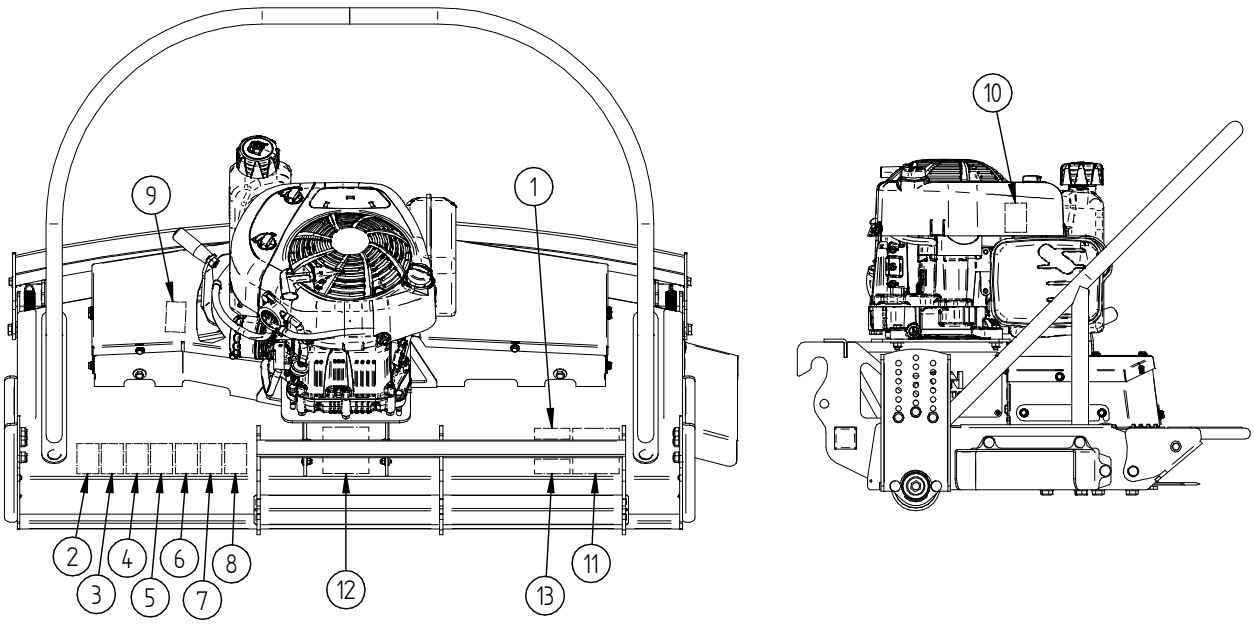

PRODUCT DESCRIPTION

The front cutter is a specialized attachment designed for ATVs. It is compatible with ATV models over 500cc engine and with stiffer suspension. If your ATV has soft suspension then use suspension lock (see article 14.12200). It is capable of cutting brush, hay, bushes and trees with a diameter of up to 100 mm / (3,9"). The mounting frame is fitted under the ATV with a model-specific adapter, allowing the front cutter to be quickly attached to the front of the ATV in either a central or left-side position. The front cutter is equipped with a belt drive and a manual clutch, that engages power between the engine and transmission shafts by shifting the clutch lever. The designed product operates with a powerful Briggs & Stratton 344 cm^3 petrol engine with a maximum speed of 3600 RPM. There are total of 6 hardened steel cutting blades rotating on the shafts, forming a maximum cutting width of 1,2 m / (47,2"). The anti-scalp rear roller follows the contours of the ground, if a wheel drops into a hole, or there is uneven ground between the wheels, the roller takes the weight of the front cutter, avoiding the blades scalping the ground. To change the cutting height, the anti-scalping rear roller can be adjusted from 50 mm / (2") to 150 mm / (5,9"). Iron Baltic front cutter can easily be switched between the lowered working position and the transport position using an ATV winch, making it fast and convenient to move between different work areas. On the right side of the front cutter is the discharge port, where a discharge chute or cover plate can be attached. The discharge chute is specifically designed for cutting short grass/hay and directing it to the side from under the front cutter. The front cutter is equipped with a tube frame, which guides cut objects away from the front cutter and operator. At the front of the front cutter, there is a swiveling guard that helps protect the cutter's frame from objects that could potentially cause damage.

Standard equipment:

- Front cutter
- Mounting frame

Product	Front cutter
Code	92.1000
Power (hp)	10,5
Engine	Briggs & Stratton 3125EX
Fuel	Petrol
Start	Pull start
Working height (mm)	50-150
Working width (mm)	1170
Dimensions (mm)	2057 x 1333 x 736
Front cutter weight (kg)	131
Mounting frame weight (kg)	26

Table 1: Front cutter technical data

OPERATOR INSTRUCTIONS

Attention!

Ensure that the user manual for the vehicle (ATV) is thoroughly read before using the front cutter!

Attention!

Ensure that the user manual for the engine is thoroughly read before using the front cutter!

PREPARATION

1. Examine the planned operating area carefully and remove all foreign objects.
2. Never use the accessory unless you are wearing proper clothing. Avoid loose clothing that might become entangled in moving parts. Wear appropriate footwear that helps to avoid slipping.
3. Handle fuel with caution as it is highly flammable.
    a. Use an appropriate fuel container.
    b. Never fill the equipment when the engine is running or hot.
    c. Fill the fuel tank outdoors and be extremely careful. Never fill the fuel tank indoors.
    d. If possible, remove any equipment which has a petrol engine from the carrier or trailer, and fill it up while it is on the ground. If this is not possible, then fill such equipment from a mobile container and not from the nozzle of a petrol pump.
    e. Replace the fuel cap firmly and clean off any fuel that may have been spilled.
    f. Change your clothing if any fuel has been spilled on it.
4. Never attempt to carry out any adjustments while the engine is running (unless directly recommended by the manufacturer).
5. Never use the front cutter unless the covers, plates or any other required safety equipment has been installed.
6. Always use the personal protective equipment (PPE) that has been designed for every type of product (goggles, hearing protection, mask, etc.).
7. The safe road-steadiness of the vehicle must always be ensured by using the appropriate accessories (chains, counterbalances, etc.).
8. Always make sure that every component has been correctly installed.
9. Always wear thick leather gloves when handling the winch rope.
10. Never modify the accessories or any other parts without the written approval of the manufacturer.

PRE-USE INSPECTION

1. Review the ATV's owner's manual for any specific pre-use inspection guidelines.
2. Review the front cutter's guidelines and recommendations for safe operation.
3. Inspect the overall condition of the ATV, including tires, brakes, and controls.
4. Verify that the tires are inflated to the correct pressure and free of any damage.
5. Check the lights and indicators to ensure they are working properly.
6. Check the engine oil level and fuel level, and refill as needed.
7. Inspect the fuel and oil lines for leaks or damage.
8. Check the condition of the winch and its mounting adapter.
9. Examine the exhaust system for any leaks or damage.
10. Check the front cutter attachment for any signs of damage or wear.
11. Verify that all safety guards are in place and securely attached (see page 26).
12. Confirm that all safety features, such as kill switch is operational.
13. Ensure that all nuts, bolts, and fasteners are tightened properly.
14. Examine the cutting blades for sharpness and integrity.
15. Inspect the condition of the drive belts.

OPERATION

1. Before operation, a pre-use check must be carried out which describes that the machine must not be used if there is visible damage to the machine or vehicle.
2. Never place your hands or feet near, under, or in the rotating parts.
3. When working on gravel roads, walkways or carriageways, or when crossing them, be extremely careful. Consider possible traffic hazards. When the operator is wearing hearing protection, sounds from traffic and environment may not be heard.
4. Working in the nature may lead to biological hazards and airborne particles such as insect bites and harmful vegetation/fungi.
5. Working on soft and unstable ground may cause sudden movement and sinking of the vehicle.
6. Handling the machine in wet weather and/or on wet ground may result traction issues. Cutting in wet conditions should be avoided.
7. Following a collision with a foreign object, stop the engine and make sure that an accidental start is impossible. Examine the front cutter thoroughly to locate any possible damage and repair that damage before restarting the equipment.
8. If the equipment starts vibrating in an excessive manner, stop the engine and locate the cause immediately. As a rule, the presence of vibration is a general indicator that there is a problem.
9. When leaving the vehicle, apply every safety measure possible. Stop the front cutter engine and lower it to the operating position, set the gear to neutral, engage the parking brake, stop the ATV's engine, and remove the ignition key.
10. Running the engine indoors is prohibited, except when moving the equipment into or out of a building. Never allow the engine to work in a warehouse that does not have proper ventilation, as exhaust gases contains carbon monoxide, which is odourless, colourless and may cause death.
11. Never use the product when moving along or up a slope; only do so when moving down a slope. Be extremely careful when using the equipment on slopes. Never attempt to cut on a steep slope.
12. Keep bystanders away from the operating area to avoid injuring people or causing material damage.
13. Starting the machine's blades on gravel or any other unsuitable ground which is not the cuttable area should be avoided.
14. Ensure that no one is in the danger zone during operation. The minimum radius of the danger zone is 10 m / 33 ft.

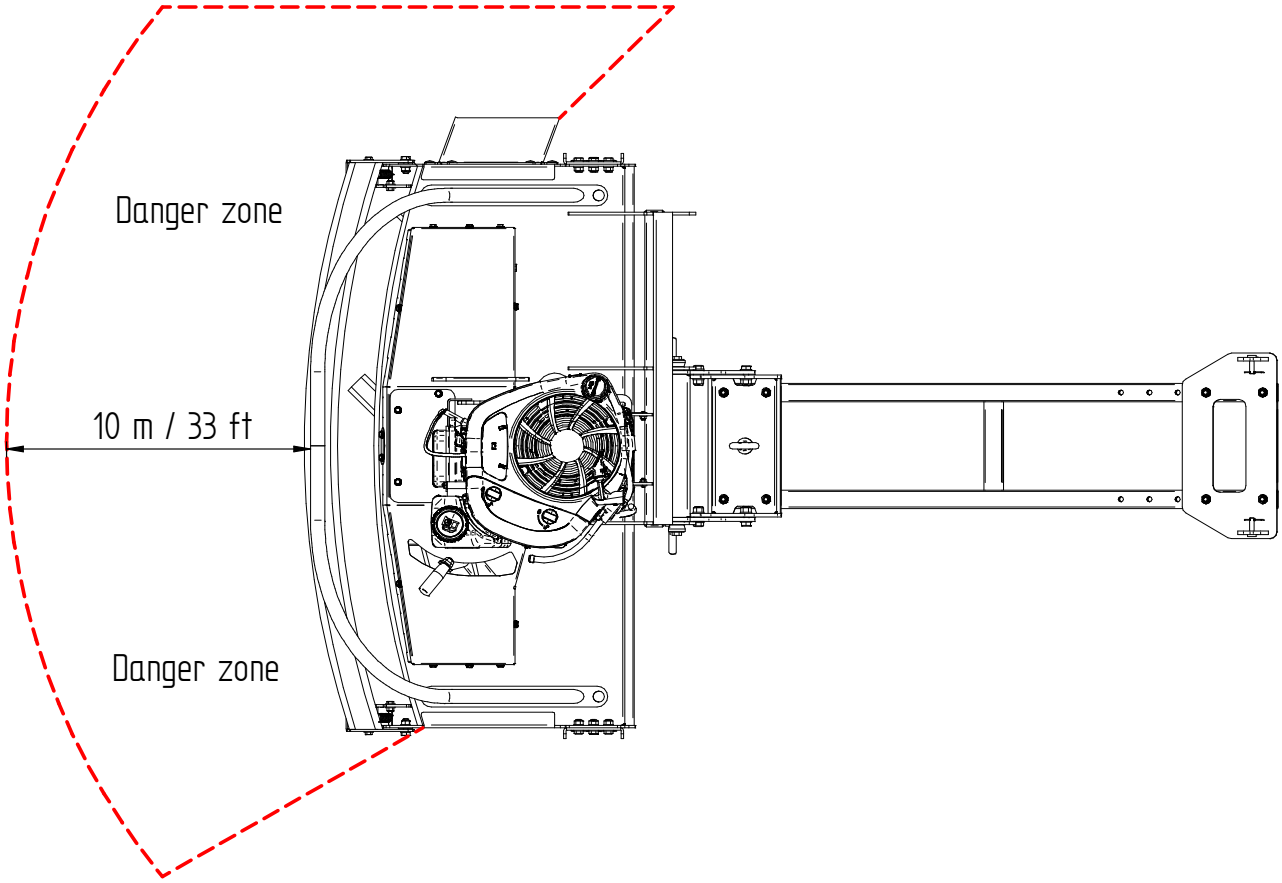

15. People/operators who are outside or near the danger zone must use personal protective equipment (PPE).
16. Never use the equipment at high speeds on a slippery surface. Be careful when backing up.
17. Never give a ride to passengers while operating the front cutter.
18. Switch the front cutter's engine off while the machine is being moved or is inoperative.
19. Never use the front cutter unless visibility and lighting levels are sufficient.
20. Keep the front cutter away from heaters or open flames.
21. Never touch the winch rope or hook when they are under load.
22. Operator must stop working if heavy exhaustion sets in, even if the work task is uncompleted.

LIFTING OPERATION

1. The lifting must be performed by two operators who are qualified professionals and have read the instructions.
2. Always follow safety requirements and procedures to prevent injuries and accidents.
3. Before starting the lifting process, ensure that you have the necessary tools and a strategy for emergencies.
4. Check that all fastenings are securely tightened and strong.
5. Ensure that the work environment is clean and free of any hazards or obstructions.
6. The ground must be stable and even.
7. Make sure that the lifting device (such as a hoist or lifting winch) is properly maintained.
8. Lifting device must be capable of lifting the front cutter (load capacity > 250 kg). Never lift the front cutter beyond the maximum capacity of the lifting equipment.
9. When lifting the front cutter, use only designated lifting spots (see figures below).
10. Use the lifting equipment carefully and closely monitor the lifting process.
11. When the front cutter is lifted to the correct height, never walk under it.

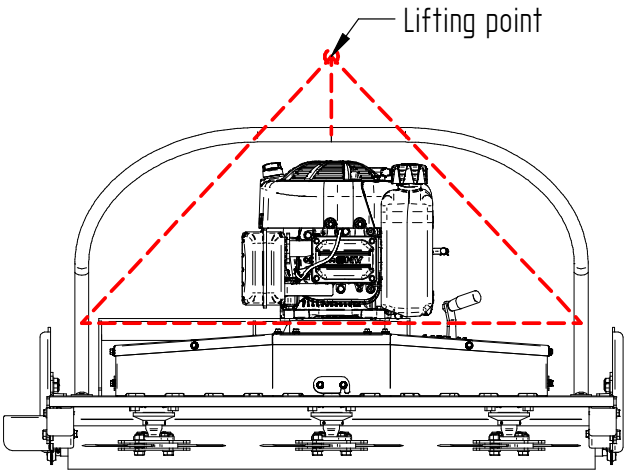

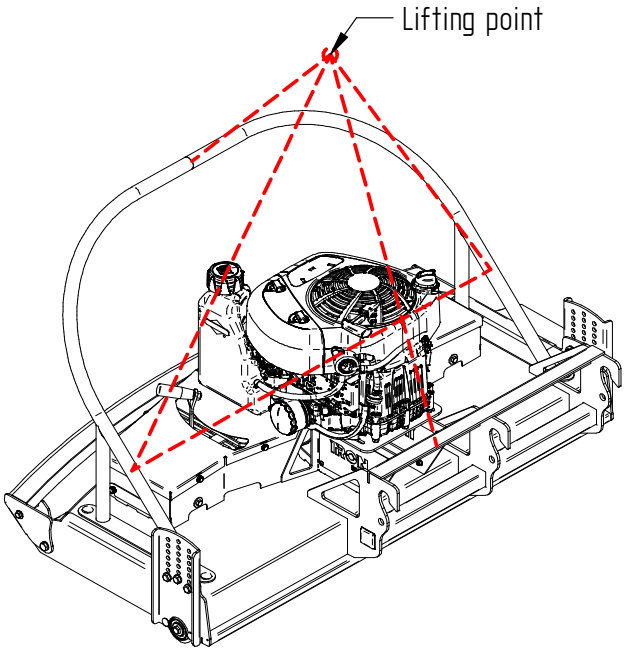

TRANSPORTATION ON A TRAILER

1. When loading the front cutter onto the trailer, people/operators must use personal protective equipment (PPE).
2. Ensure that the ATV and front cutter are in good working condition. Check for any signs of wear or damage.
3. Verify that the trailer is properly maintained and in good working order. Check the trailer's tires, brakes, and loading ramp.
4. Position the ramp at a safe angle to prevent tipping or slipping. Ensure the ramp is sturdy and securely attached to the trailer.
5. Confirm that the trailer can safely handle the weight of the ATV and the front cutter.
6. Place the front cutter into the operating position (see page 17).
7. Drive the ATV slowly and steadily up the ramp onto the trailer. Avoid sudden movements.
8. Once the ATV is on the trailer, engage the parking brake.
9. Lower the front cutter.
10. Ensure that the weight is evenly distributed on the trailer to prevent instability. Machine that is poorly positioned during transport can result in loss of control, leading to a traffic accident or roll into the cab of the transport vehicle.
11. Use straps to secure the front cutter to the trailer. Always inspect the straps before and after every use. Check the load limit, worn stitching, etc.
12. Ensure the straps are securely tightened and attached to the designated points to prevent the front cutter from falling off during transport (see figure below).

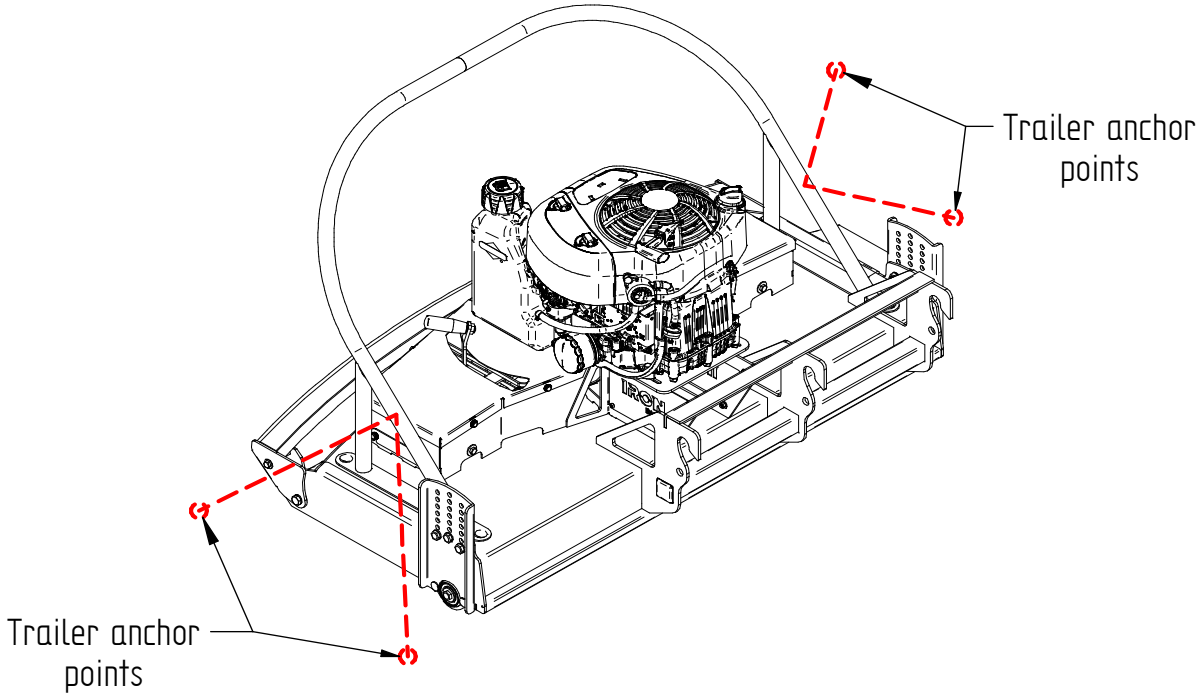

13. Ensure that all trailer lights, including brake lights and turn signals, are functioning properly.
14. Make sure the trailer, ATV and front cutter are visible to other road users. Use reflective tape or markers if needed.
15. Periodically stop to check that the ATV and front cutter remain securely fastened during transit.
16. Drive carefully and avoid sudden stops or sharp turns to maintain stability.
17. Upon starting the unloading process, ensure that the ramp is securely in place and stable before driving the ATV off the trailer.
18. Verify that the area around the trailer is clear of obstacles and bystanders.
19. Drive the ATV slowly and carefully down the ramp. Ensure the front cutter remains securely attached during the unloading process.
20. Once unloaded, park the ATV on a level surface, engage the parking brake, and inspect the front cutter for any damages. If damage is present that makes it unsafe to operate, the machine must not be put into service.
21. If an accident occurs during loading or unloading, stop immediately and assess the situation. If necessary, call emergency services for assistance and provide details about the accident.

TRANSPORTATION POSITION AND OPERATING POSITION

Use the ATV's winch to change the front cutter's operating position. By pulling on the rope, you will be able to lift the front cutter into the transportation position, and by releasing the rope, you will be able to lower the front cutter into the operating position.

NB! The rope must be rated and capable for lifting the front cutter. Rope must be checked and replaced if necessary!

NB! Personal protective equipment must be used while operating!

Attention!

!! Be careful when handling the winch! Never attempt to use it to lift the front cutter over its final position, as this may cause the winch to break !!

Transportation position

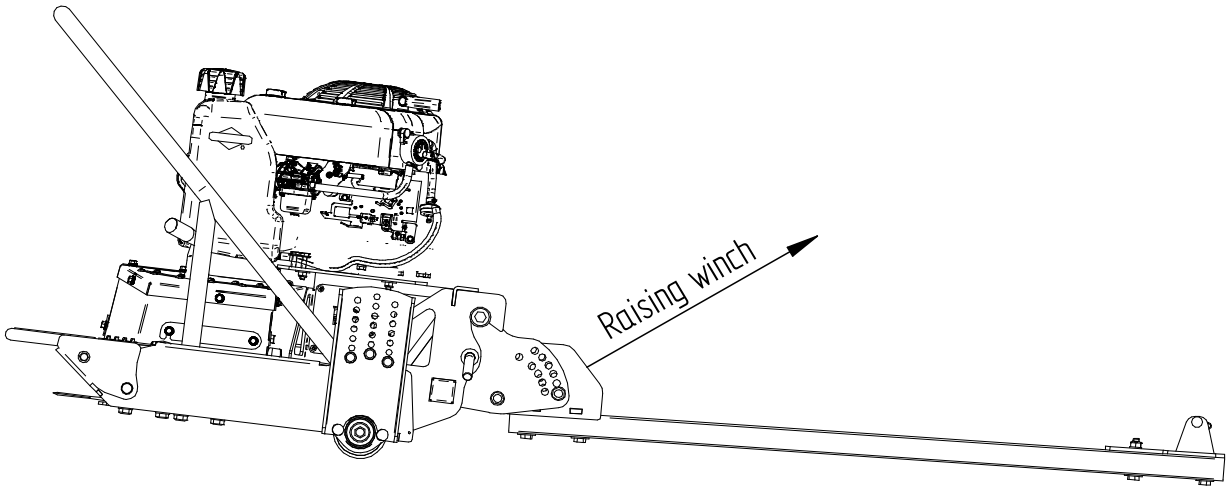

Operating position

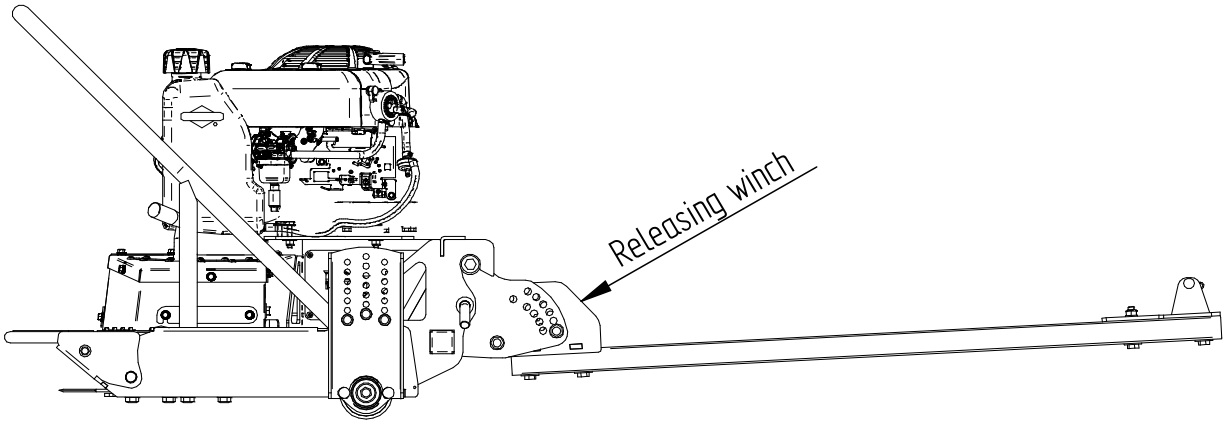

CUTTING HEIGHT ADJUSTMENT

The cutting height of the front cutter is achieved by the position of the roller, which can be adjusted to 7 different settings by changing the position of the bolts. The minimum adjustable cutting height is 50 mm and the maximum is 150 mm. To adjust the height, remove bolts of the roller plate and raise or lower it as needed.
NB! If the cutting height is set too low, blades may shatter and send pieces flying. Examine the planned operating area and set the cutting height so that blades do not hit the ground!
NB! Personal protective equipment must be used when adjusting cutting height.

1. Place the front cutter into the transportation position.
2. Remove bolts A (both sides of the front cutter).
3. Select the appropriate hole and re-install bolts A.
4. Tigthen bolts A to 55 Nm.

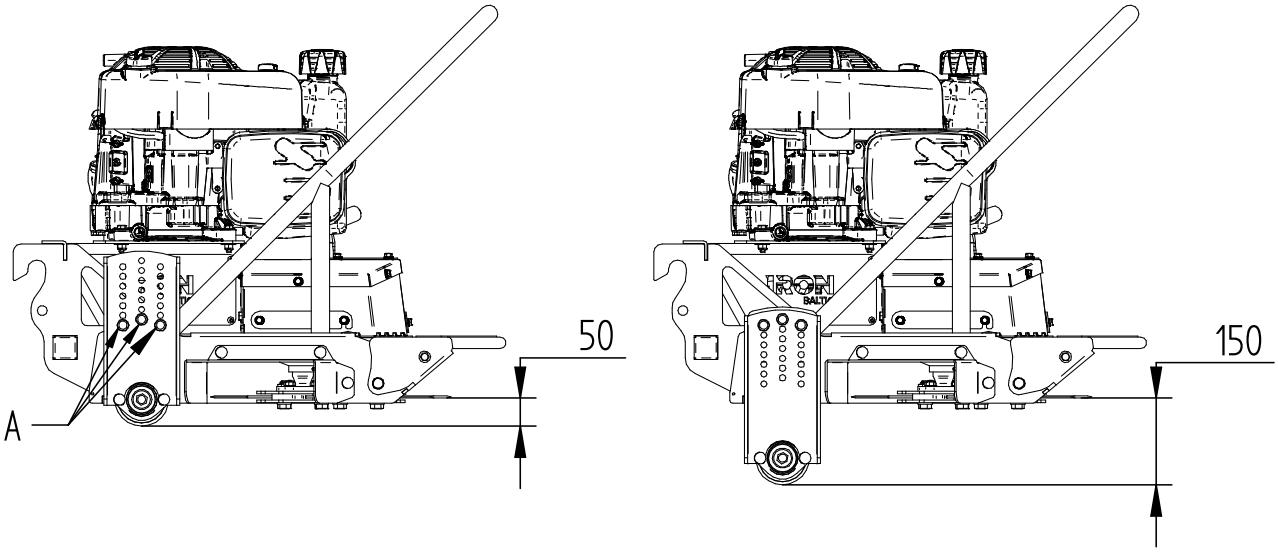

Attention!
!! Bolted connections should be periodically checked !!

MOUNTING FRAME ANGLE ADJUSTMENT

When attaching the front cutter, the angle of the device may differ from the inital adjustment. Adjust the angle by repositioning the bolts.
NB! When adjusting the angle, use winch to adjust the height of the frame!
NB! Personal protective equipment must be used when adjusting angle!

- For light working conditions, we recommend adjusting the front cutter parallel with the ground.
- For difficult working conditions, we recommend adjusting the front of the cutter slightly upwards at a small angle.

1. Loosen the bolt, A but do not remove it.
2. Remove bolt B (both sides of the adapter).
3. Select the appropriate hole and re-install bolt B.
4. Retighten bolts A and B to 90 Nm.

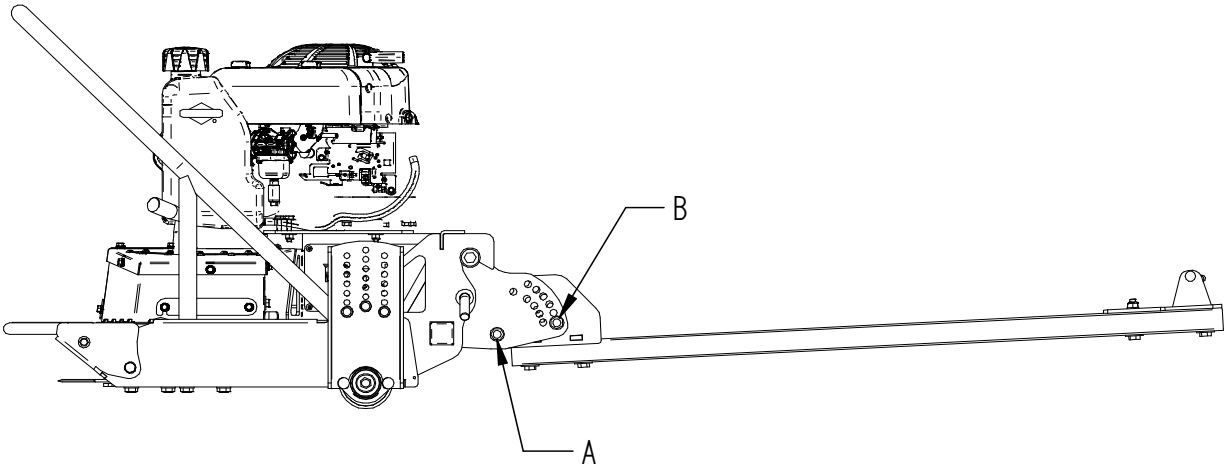

Attention!
!! Bolted connections should be periodically checked !!

MOUNTING FRAME DISTANCE ADJUSTMENT

The distance of the mounting frame from the front of the ATV is adjusted with an adapter. The distance is adjustable in steps of 60 mm, up to a maximum of 180 mm. We recommend adjusting the distance so that the angle of the winch cable falls within the range of 15–30° while lifting the front cutter.
NB! Personal protective equipment must be used when adjusting frame distance!

1. Remove adapter bolts (A).
2. Choose the appropriate distance and re-install bolts.
3. Tighten bolts (A) to 55 Nm.

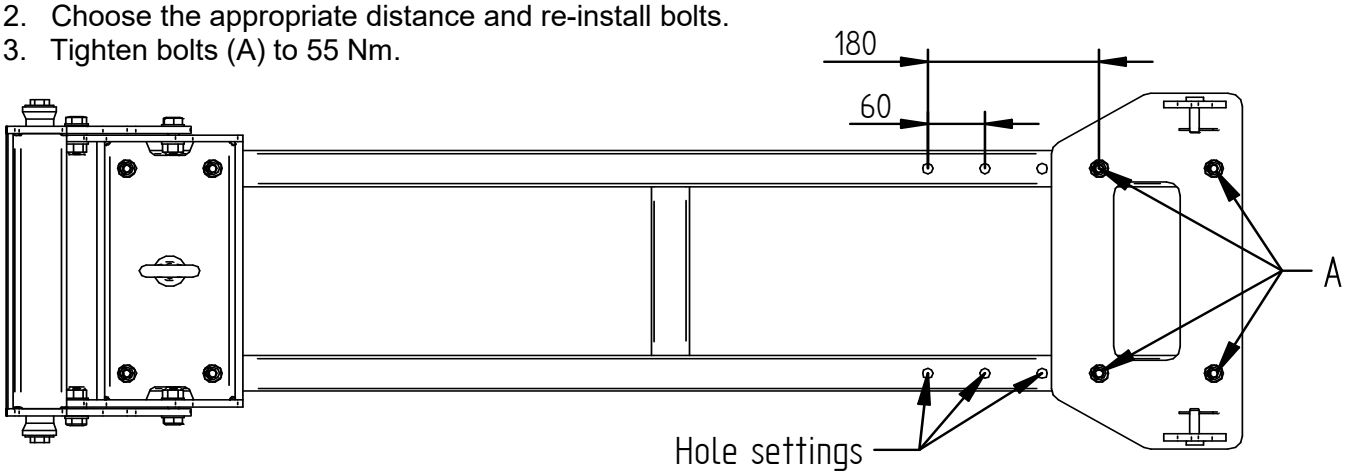

Attention!
!! Bolted connections should be periodically checked !!

SIDESHIFT

It is possible to move the front cutter according to working conditions either centrally or 333 mm / (13") to the left side. For light working conditions, we recommend positioning the front cutter to the center. For difficult working conditions (e.g., ditch banks) we recommend positioning the front cutter to the left.
NB! Personal protective equipment must be used when positioning!

1. Place the vehicle on an even surface.
2. Lower the front cutter to the ground.
3. Unhook the pins from the front cutter frame.
4. Move the vehicle and hook it to another position.
5. Place the front cutter into the operating position.
6. Install pins to the front cutter frame.

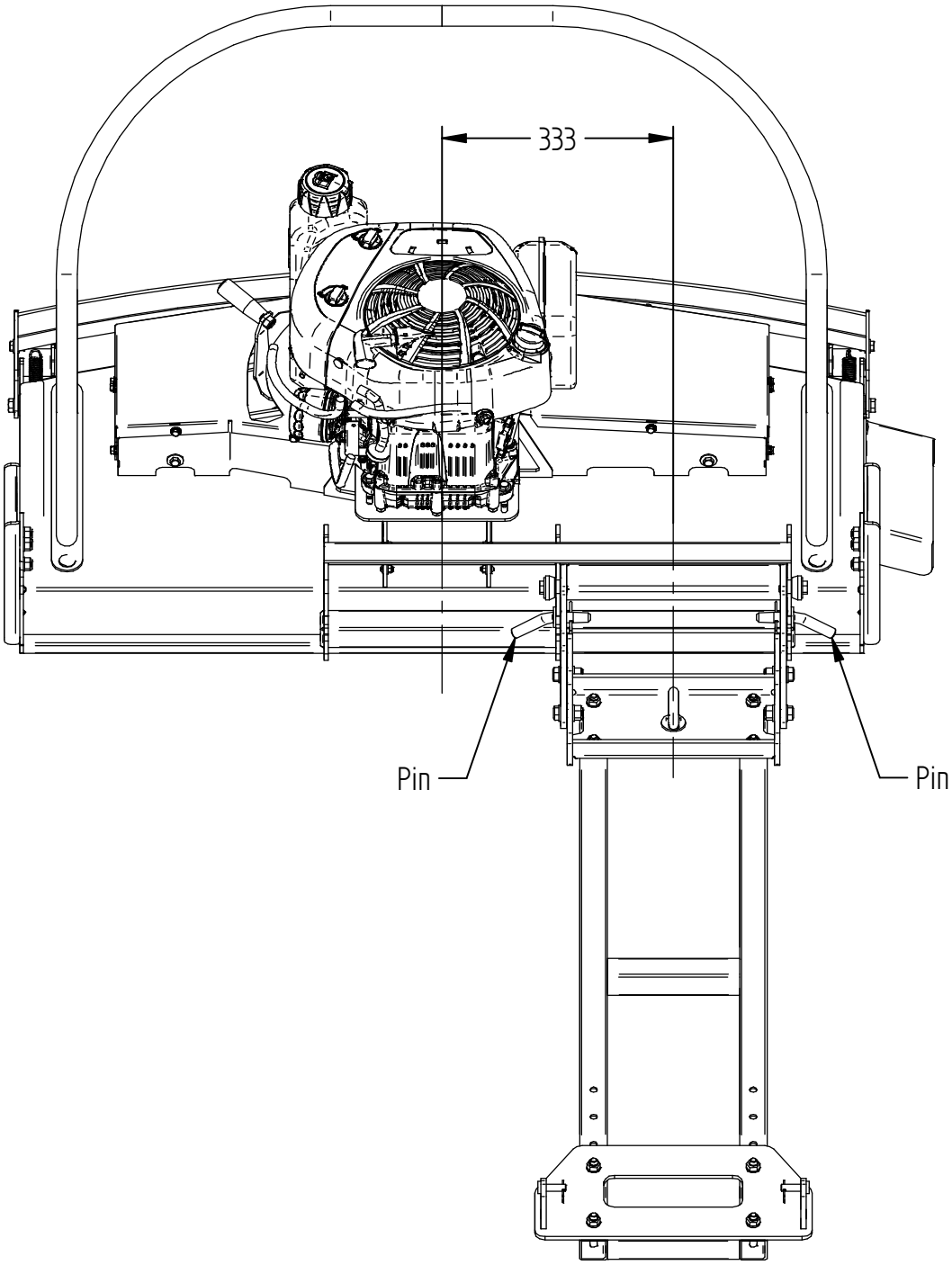

CLUTCH NEUTRAL POSITION AND OPERATING POSITION

The function of a clutch is to engage and disengage the power between the engine and transmission shafts. The front cutter's has two positions: in neutral position, the power transmission is suspended, while in the operating position, contact is made with the belts, initiating the rotation of the cutting blades.
NB! When engaging the clutch, operator and all body parts must be as far away from the blades as possible.
NB! Personal protective equipment must be used!

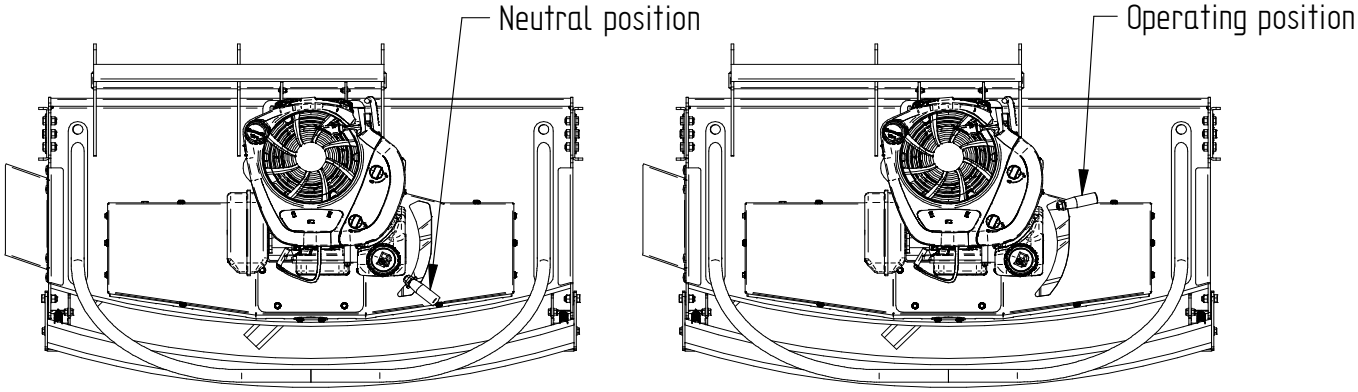

1. Pull the clutch lever.
2. Push the lever down and release tension.

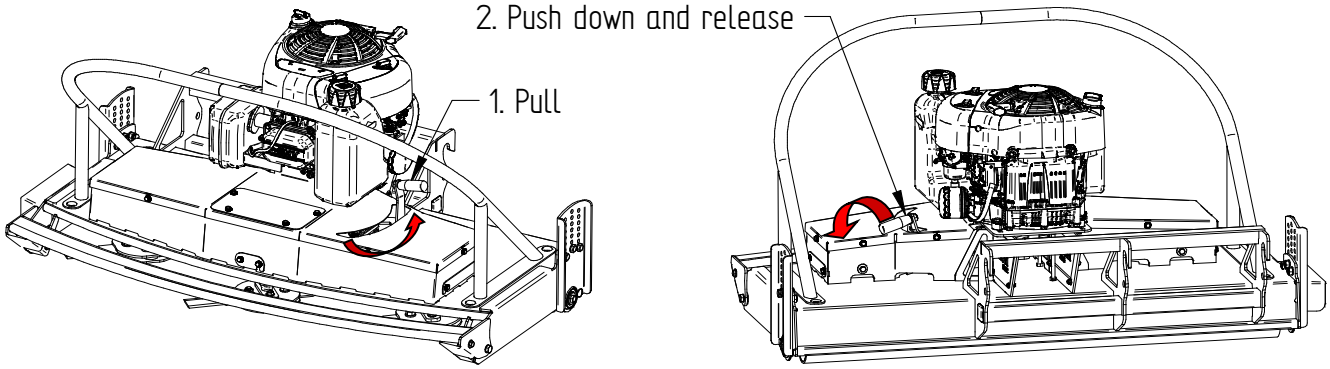

Attention!
!! When the work has been completed, set the clutch lever to the neutral position !!

MOWING TECHNOLOGY

When using the front cutter, the discharge chute can be attached to direct residues to the side, increasing mowing efficiency and optimizing the load on the front cutter. Using the cover plate helps contain debris and prevents it from being thrown out to the side.
NB! Use discharge chute only for short grass and hay!
NB! Personal protective equipment must be used when installing discharge chute or cover plate!

1. Lift the front cutter to transport position.
2. Stop the engine and ensure that the cutting blades are fully stopped.
3. Remove bolts (A).
4. Attach the discharge chute or cover plate.
5. Fasten bolts (A) to 15 Nm.

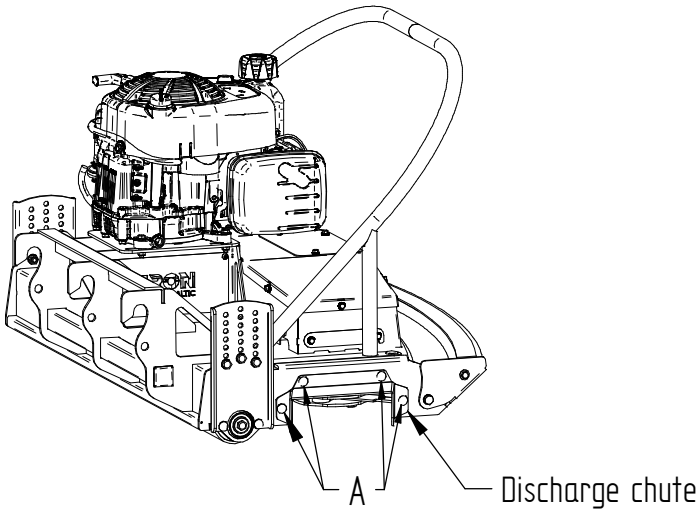

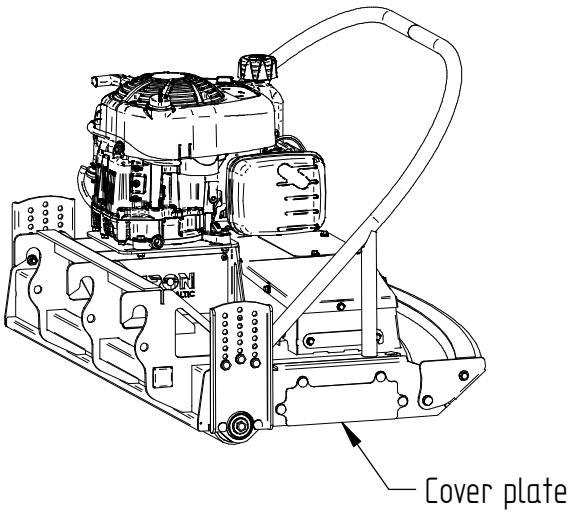

STARTING THE ENGINE

OBSERVE ALL SAFETY PRECAUTIONS; KEEP HANDS AND FEET AWAY FROM ROTOR AND OTHER MOVING PARTS. KEEP SPECTATORS AT A SAFE DISTANCE. PERSONAL PROTECTIVE EQUIPMENT MUST BE USED!

Attention!
!! Read and understand the engine operators manual before use !!

PULLSTART

1. Attach the throttle / starter switch bracket with U-brackets, or 14.10000 / 14.11000 quick release clamps (available as an optional extra). Typically, the remote control unit is mounted on the front of the ATV luggage frame.

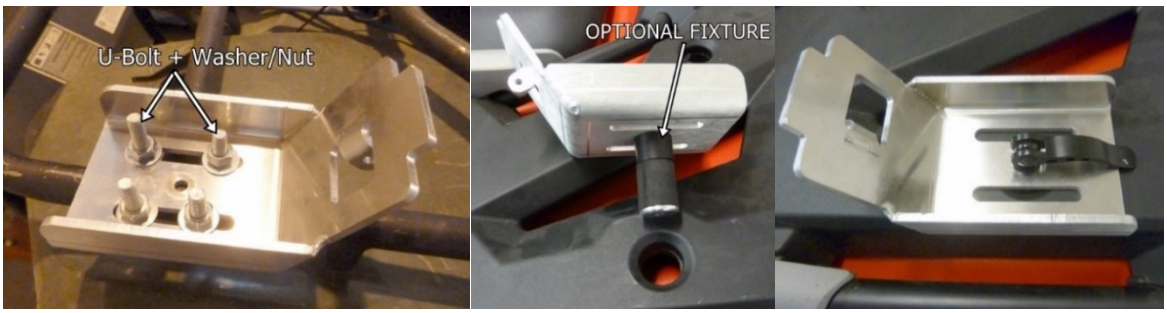

2. Place the front cutter into the transportation position.
3. Make sure that front cutter moving parts are not obstructed.
4. Ensure that the clutch lever is set to the neutral position.
5. In case of cold start, close the choke valve.
6. Pull the starter grip SLOWLY until you feel resistance, then SLOWLY return the starter rope to the initial position.

7. Hold the starting handle firmly, pull the starter grip all the way out with a strong and even motion, then return it slowly. (one or two strong pulls should start the engine).

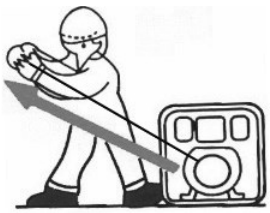

8. Let the engine warm up few seconds, then set the choke to the working position.
9. Push the button to STOP the engine. To reset, twist the button 90º to the right.

10. Set the clutch lever to the neutral position.

IF THE THROTTLE IS ALTERED TO INCREASE THE ENGINE R.P.M BEYOND THE RECOMMENDED LEVEL, THE GUARANTEE BECOMES INVALID.

OPERATING THE FRONT CUTTER

1. Carry out pre-use inspection (see page 13).
2. Place the front cutter into the transportation position.
3. Make sure that moving parts are not obstructed.
4. Ensure that the clutch lever is set to the neutral position.
5. Start the front cutter's engine.
6. Set the clutch lever to the operating position.
7. Place the front cutter into the operating position.
8. Commence operation. **Choose an operating speed that is suitable for the conditions. Take into account the fact that the front cutter's engine operates at a maximum speed of 3600 RPM. When moving the front cutter too fast, the engine will be unable to eject, the shaft's rotation speed will slow down, and this will cause belts wear.**
9. When moving from one location to another, lift the front cutter into the transportation position. Make sure that you have enough room to be able to move around and that you do not endanger anyone.
10. Stop the engine when the work has been completed and set the clutch lever to the neutral position.

Attention!
!! NEVER WORK ON A SLOPE THAT HAS AN INCLINATION OF OVER 10% !!
!! Use a slope meter or digital inclination gauge to measure the angle of the slope.
If unable to determine the slope angle then avoid working on that slope !!

FORWARD SPEED

The amount of grass or weeds to be cut dictates the forward speed; slow forward speeds give better results in most cases. When driving too fast, changing direction too quickly or stopping abruptly, the vehicle/machine may get damaged or flips/falls over. Ensure you follow the procedure below.

Normal forward speed: 1 km / h – very heavy use
10 km / h – very light use

To ensure proper operation of the front cutter, start moving at the slowest possible speed and make sure the front cutter engine is running at maximum speed. If this is not possible due to very difficult mowing conditions, then cross the same route twice. If the front cutter engine speed starts to slow down, slow down the vehicle and let the front cutter engine reach maximum speed again. It is important to always listen the front cutter engine sound and make sure the engine and front cutter are operating effectively, and to slow down or stop the vehicle when the engine starts making an unusual noise. If engine performance does not return, stop the engine and ensure that the transmission shafts are not obstructed.

When moving from normal working conditions to heavier cutting, it may be evident that the engine dies down and loses revs. SLOW DOWN IMMEDIATELY to allow the front cutter engine revs to build up again to normal working speed.

Attention!
!! Failure to follow these instructions will result ultimately severe damage to the drive belts !!

STOPPING THE FRONT CUTTER

- When stopping the front cutter after a period of heavy use, run the machine with no load in a stationary position, for at least 5 minutes, to allow the drive belts to cool down.
- Be careful, as some parts, such as exhaust pipe, belts, etc., may be hot after the engine has been stopped.
- When the front cutter has cooled down (Min 1hr after last used) ensure all grass has been removed from engine cooling fins, drive belt area, and rotor before operating again.

Attention!
Never drive faster than 15km/h when the front cutter is in the transportation position.
Never drive faster than 10km/h when the front cutter is in the operating position.

MAINTENANCE

BEFORE PERFORMING ANY MAINTENANCE PROCEDURE OR INSPECTION, STOP THE ENGINE, WAIT FIVE MINUTES TO ALLOW ALL PARTS TO COOL. DISCONNECT THE SPARK PLUG WIRE, KEEPING IT AWAY FROM THE SPARK PLUG.

MAINTENANCE AND CLEANING

1. The maintenance of the front cutter is mandatory.
2. The maintenance of the vehicle is mandatory (see the vehicle manufacturer's user manual).
3. The maintenance of the front cutter must be performed by two operators.
4. Personal protective equipment must be used (PPE).
5. Perform maintenance in the transportation position or lift the machine using straps.
6. Maintenance and repairs of the machine must be carried out by qualified operators/professionals.
7. Machine must be cleaned regularly. The dirt and grime could catch fire.
8. Never tilt the machine on the side to easily get access. Fluids slosh around and end up where they are not supposed to.
9. Waste operating fluids must be utilized correctly.
10. For cleaning metal surfaces use neutral universal cleaners and microfibre cloth.
11. Using strong chemicals for cleaning is prohibited (acetone, trichloroethylene, sulfuric acid, hydrochloric acid, phosphoric acid, caustic soda, ammonium hydroxide, ammonium chloride, etc).

MAINTENANCE SCHEDULE

Maintenance operation:	Before Each Use	Every 5 hours	Every 10 hours	Every 25 hours	Every 100 hours
Engine (see the engine manufacturer's user manual)	●	●	●	●	●
Check general equipment condition	●	●	●	●	●
Check safety elements	●	●	●	●	●
Remove excess crop gathered on machine	●	●	●	●	●
Check wear on blades	●	●	●	●	●
Check the fasteners			●	●	●
Check and grease transmission shafts			●	●	●
Check drive belts condition				●	●
Clutch inspection				●	●
Check roller bearings				●	●
Check the condition of all connecting parts				●	●
Check the wear rate of metal parts					●
Change spark plug (see the engine manufacturer's user manual)					●

!! Attention !!

After first hour of operation:

- Check the belt tension between the engine and the drive shaft and adjust if needed.
- Check that all fasteners are secure.

ENGINE

Refer to the engine manufacturer's user manual for engine maintenance.

COLLECTED HAY REMOVAL

Remove any collected hay from the rotor, engine, roller, transmission shafts and belt housing. Excessive hay can lead to overheating and fire. Disconnect the spark plug wire to prevent the engine from starting automatically. Remove any hay that is wrapped around the rotor, roller and transmission shafts.

ROTOR BEARING INSPECTION

Rotate rotor shaft by hand and feel for any roughness in the bearings. Also try to pull the shaft from side to side to see if any movement is found. If symptoms persist strip down the rotor-housing unit and inspect bearings. If necessary, replace the bearings.

BLADES WEAR

Check the wear on the blades after every 5 operating hours. When it's time for replacement, inspect the entire set of blades. If any blade is partially worn or has a missing piece larger than 15x15 mm / (0,6"x0,6"), then blade should be replaced. When the first cutting edge is becoming blunt, the whole set of blades should be turned around. (Using blunt blades will reduce the cutting efficiency and increase fuel consumption).
NB! Blade sharpening is not allowed!

V-BELTS WEAR

Regularly check the condition of the belts. To do this, remove the inspection plate and inspect the belts underneath. If any belts are worn or damaged, replace them following the instructions on page 29.

1. Loosen the bolts (A).
2. Remove the inspection plate.
3. Check the condition of the belts.
4. Reinstall the plate and tighten the bolts to 10 Nm. If replacement is required, see page 29.

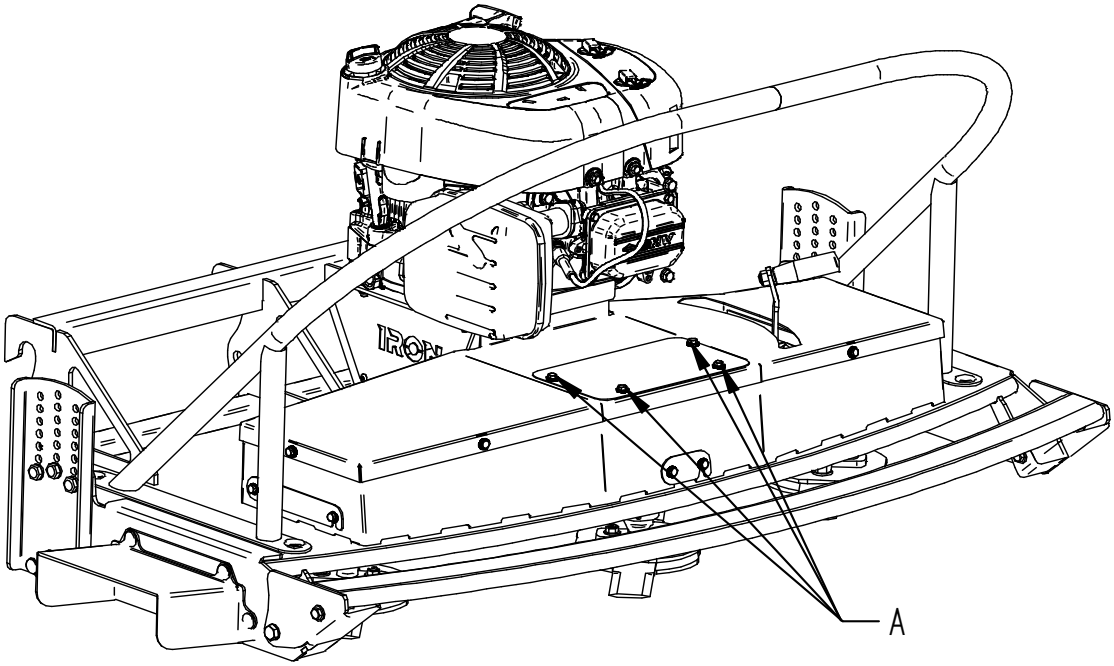

SAFETY ELEMENTS

1) Regularly check and tighten all bolt connections to ensure they are secure and not subject to wear or loosening.
2) Ensure belt drive cover is in place and in good condition to prevent debris and accidental contact with moving elements.
3) Check the condition of the discharge chute/cover plate.
4) Inspect the front protection to ensure it is functioning properly and is in proper condition.
5) Check the condition of the tube frame.
6) Inspect all welds on the front cutter for any signs of cracking or fatigue, which could indicate structural weaknesses.
7) Ensure that the kill switch is operational and accessible.
8) Make sure that all safety stickers are visible and procedures are observed, offering clear directions to the operator.

GREASING

Grease the transmission shaft bearings after every 10 operating hours. To grease the upper bearings, loosen the bolts (do not remove them) and slide the plate(s) away.

1. Loosen the bolts (A).
2. Slide the plate(s) away.
3. Grease the bearings.
4. Reinstall the plate(s) and tighten the bolts to 10 Nm.

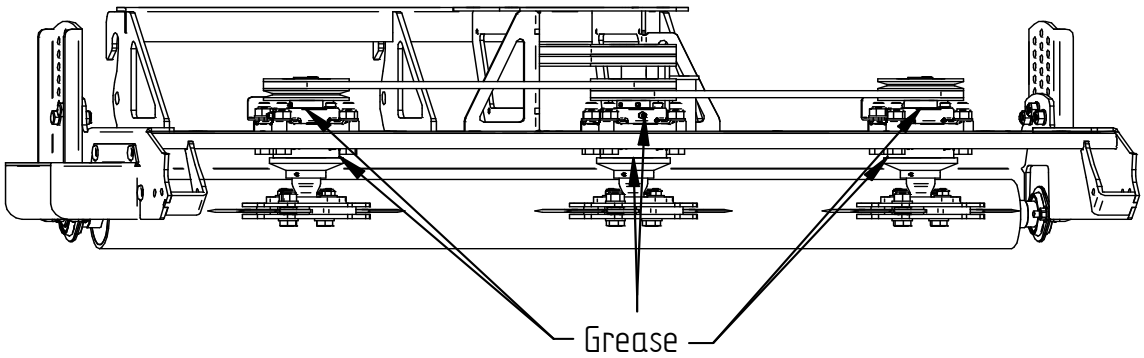

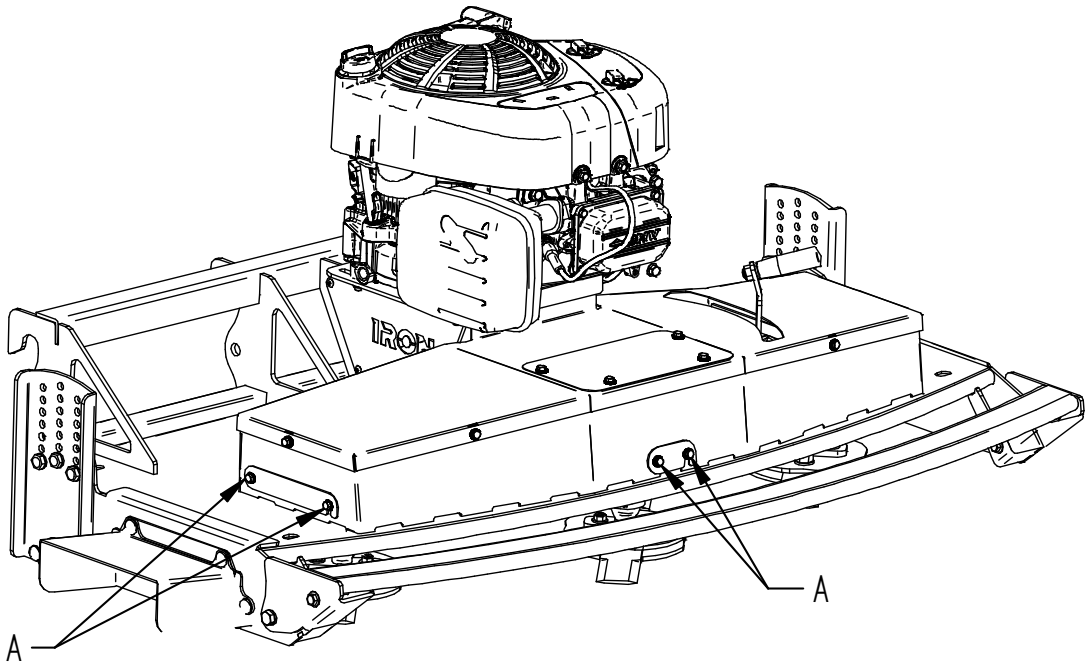

**** Some components removed for better visibility.***

CUTTING BLADES REPLACEMENT

BEFORE PERFORMING ANY MAINTENANCE PROCEDURE OR INSPECTION, STOP THE ENGINE, WAIT FIVE MINUTES TO ALLOW ALL PARTS TO COOL. DISCONNECT THE SPARK PLUG WIRE, KEEPING IT AWAY FROM THE SPARK PLUG. PERSONAL PROTECTIVE EQUIPMENT MUST BE USED WHEN REPLACING BLADES!

!! When breaking or losing a blade, it is important to replace it immediately. NB! Use only original spare parts !!

Step 1 Ensure front cutter engine has stopped and the blades have stopped rotating. Switch off the fuel tap and let the machine cool down. Disconnect the spark plug to ensure the engine cannot be started while changing blades.

Step 2 Lift the front cutter to access the cutting blades (see page 15).

Step 3 Remove the blade mounting bolts and nuts.

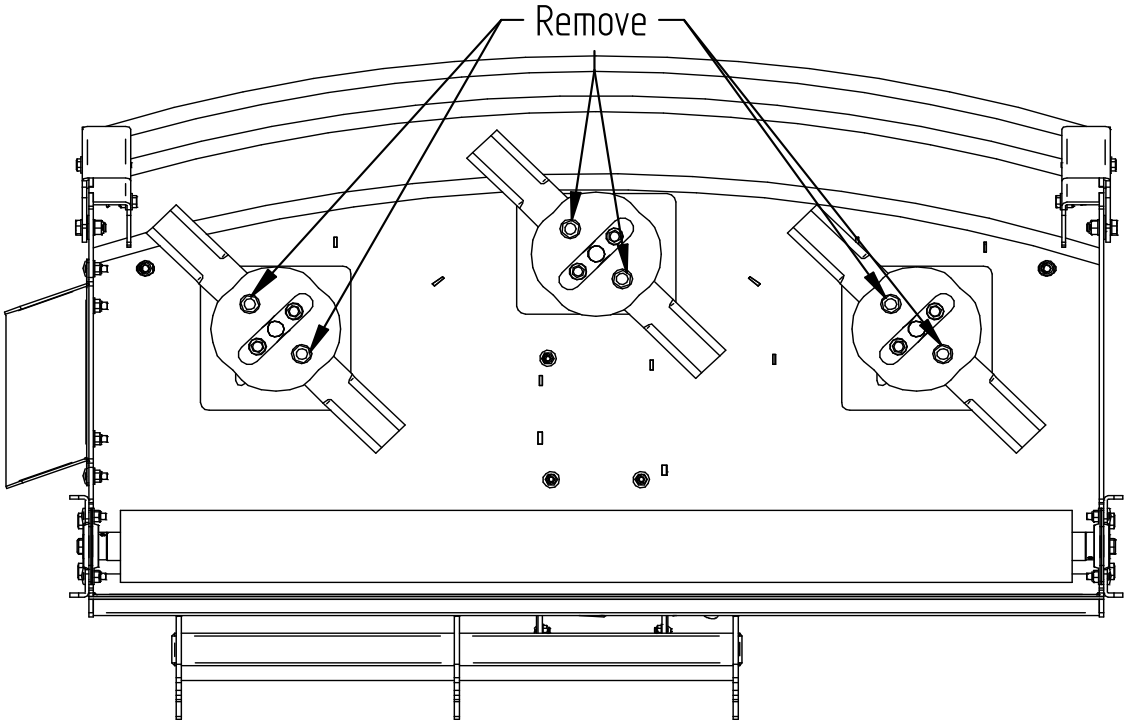

Step 4 Replace or turn around blades (note the direction of rotation). Insert the bushing (Pos.9) into the blade hole and fasten blade to the holder (Pos.7). **NB! When replacing the blade, ensure to use a new bushing!**

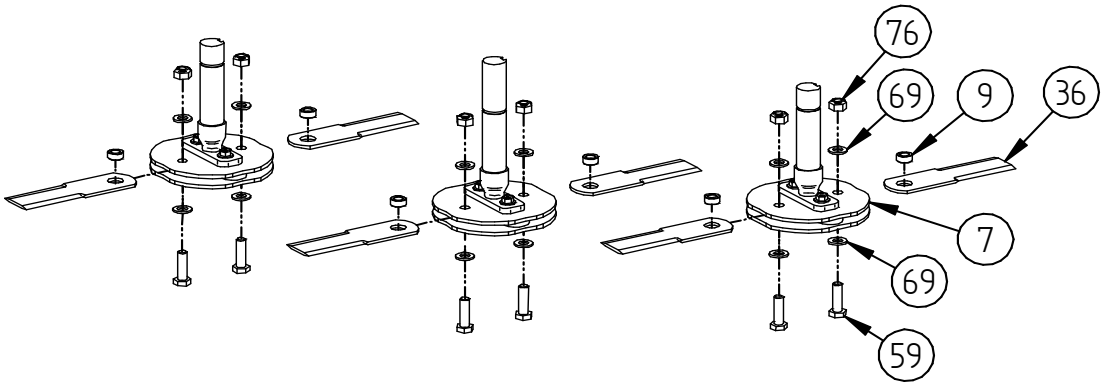

BELT REPLACEMENT

BEFORE PERFORMING ANY MAINTENANCE PROCEDURE OR INSPECTION, STOP THE ENGINE, WAIT FIVE MINUTES TO ALLOW ALL PARTS TO COOL. DISCONNECT THE SPARK PLUG WIRE, KEEPING IT AWAY FROM THE SPARK PLUG. PERSONAL PROTECTIVE EQUIPMENT MUST BE USED WHEN REPLACING BELTS!

!! Check belts wear and tension regularly. Over- and under-tensioning will cause premature wear of the belts !!

Step 1

Loosen the engine holding bolts.

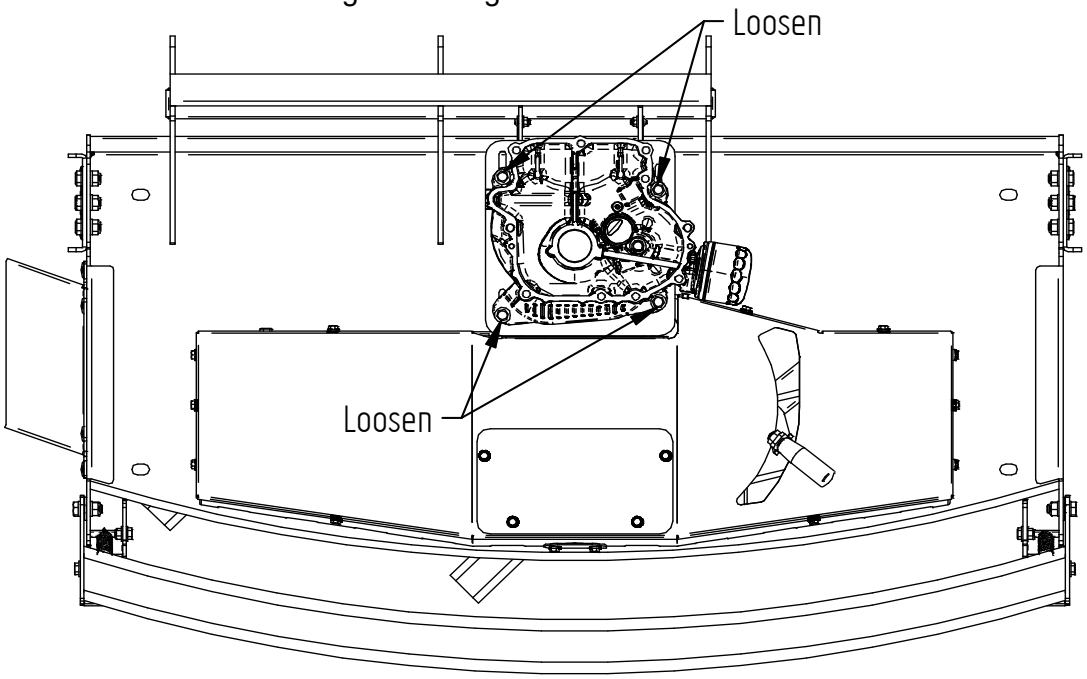

** Tube frame and engine components removed for better visibility.*

Step 2

Remove bolts and belt drive cover.

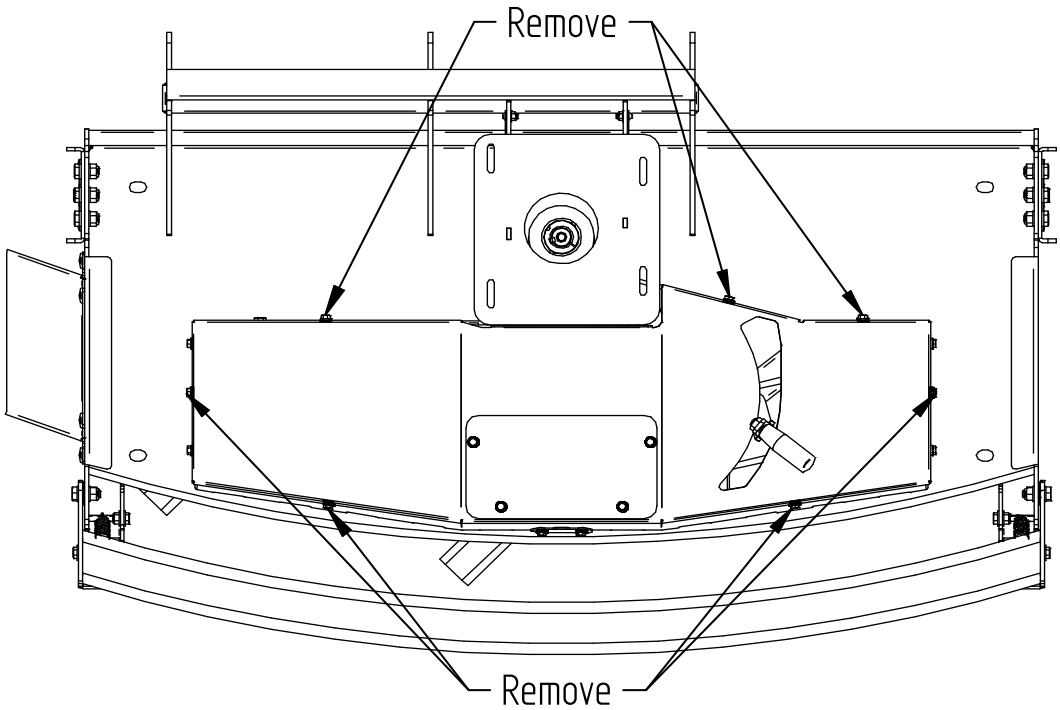

** Engine removed for better visibility.*

Step 3

Loosen the tensioning plate bolts.

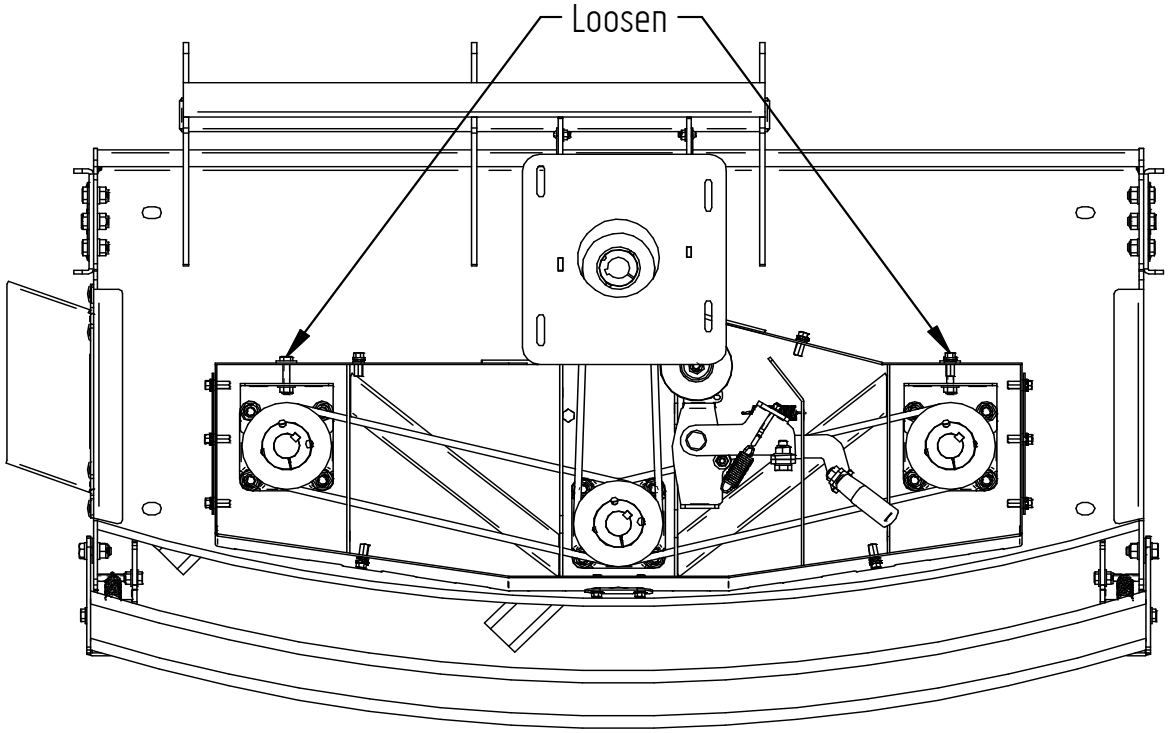

Step 4

Loosen the bearing housing bolts from both side of the front cutter.

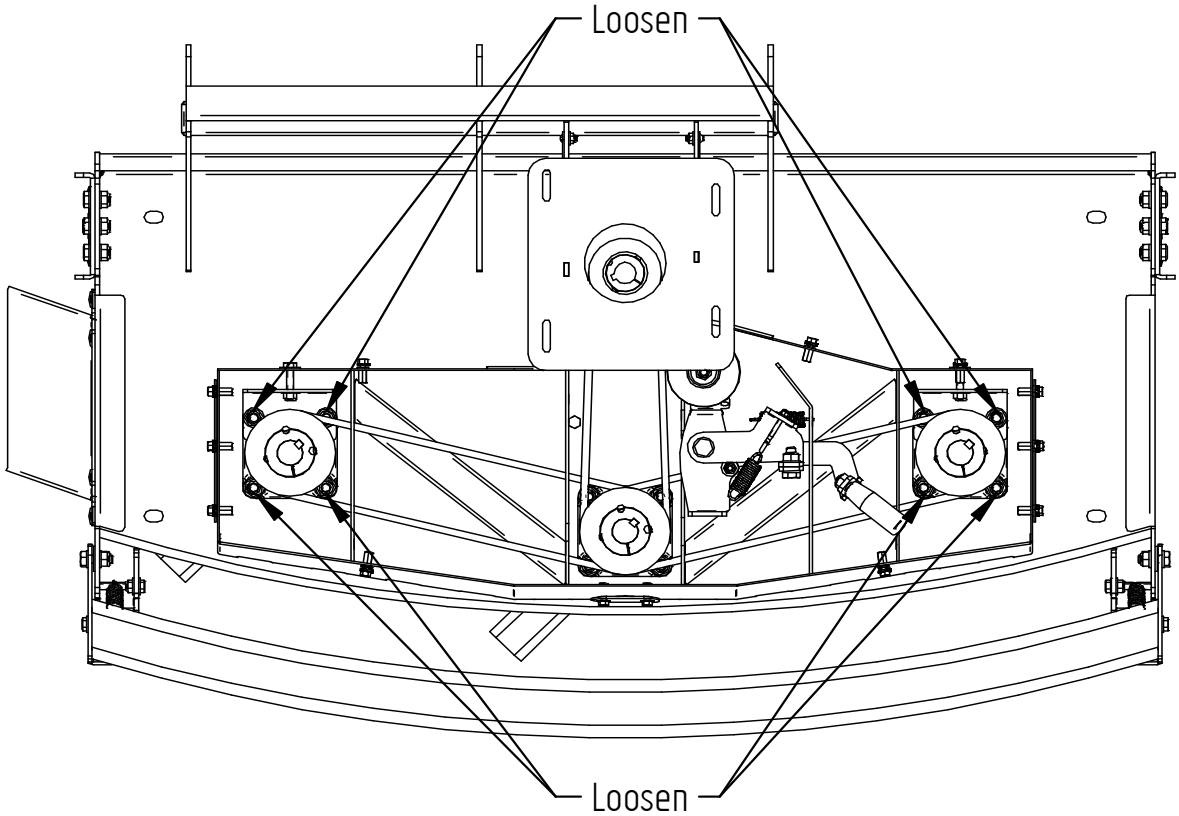

Step 5

Replace the belts. **NB! On the transmission shafts use XPZ1087 V-belts and from the engine to the transmission shaft use XPZ925 V-belts!**

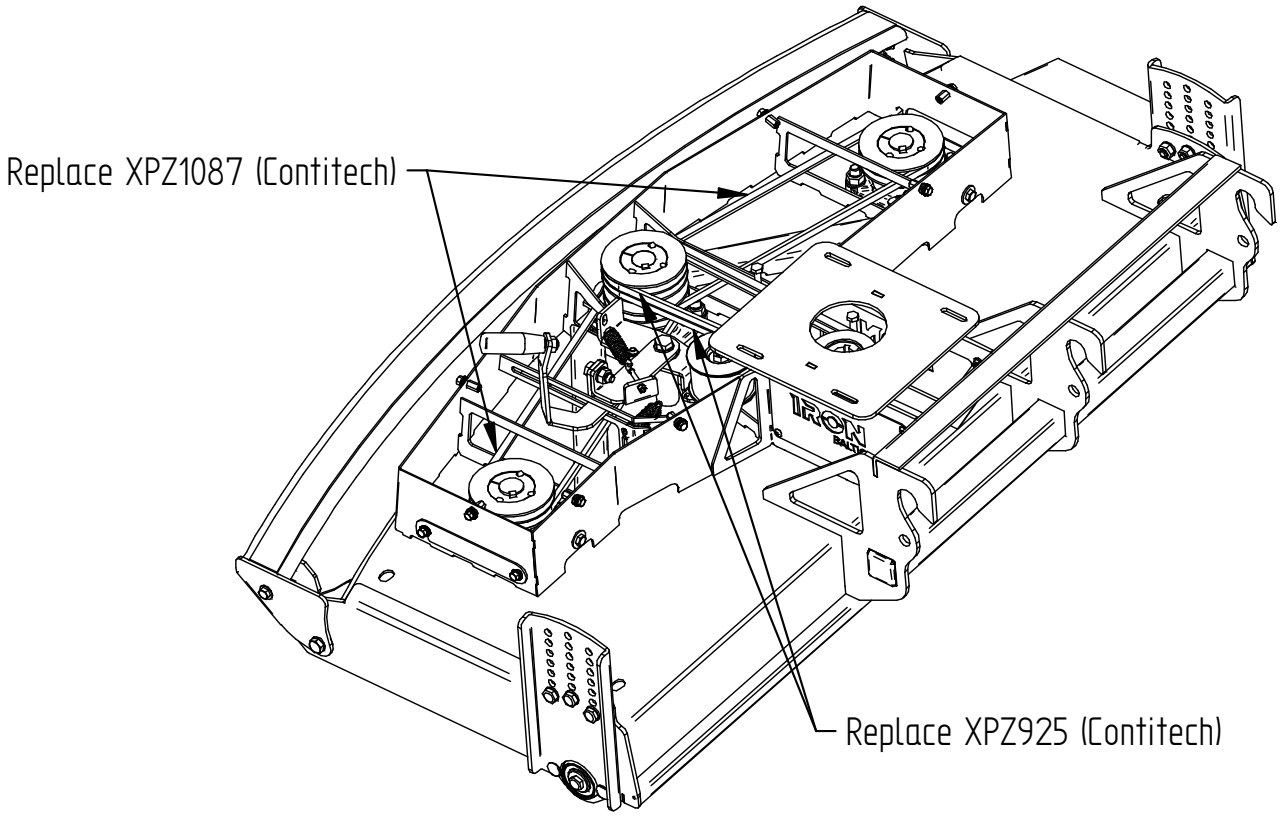

Step 6

Increase the XPZ1087 belts tension by tightening the bolts until belts tightened up to a position where they still can be compressed 10-15 mm by hand (see next page). **NB! Make sure that the V-belts are in the correct position on the pulleys!**
NB! Check that the belt does not hit any structure.

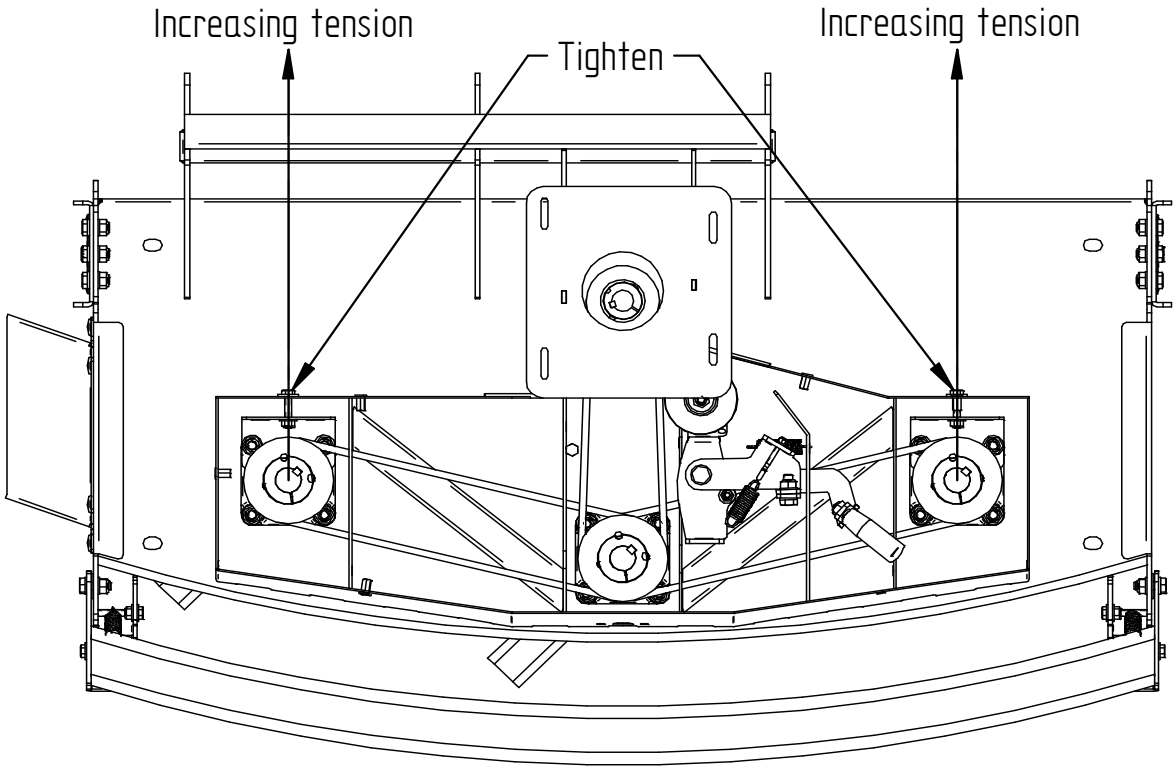

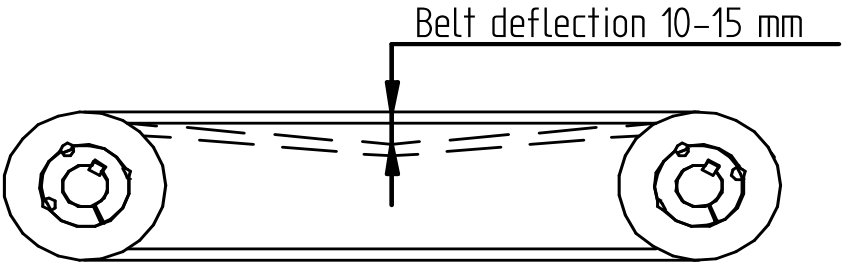

Before tensioning, we recommend to check pulleys alignment to avoid belt wear.

1. Place the metal ruler on top of one pulley so that it is flat and stably positioned.
2. Position the other end of ruler on top of the second pulley and check for any gap between the pulley and the ruler.
3. If the pulleys are correctly aligned at the same height, there should be no significant gap between them.
4. If you notice any gap between one pulley and the other, adjust the height of the pulleys accordingly to ensure both pulleys are evenly installed.

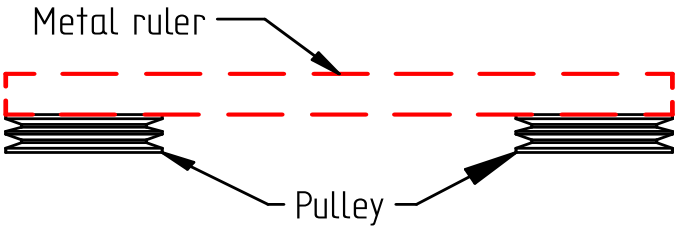

Attention!
!! Take care to prevent fingers from being caught between the belt and pulley !!

Step 7

Fasten the bearing housing bolts to 90 Nm.

Step 8

Increase the XPZ925 V-belts tension by sliding the motor until V-belts tightened up to a position where they still can be compressed 40-50 mm by hand (see next page). **NB! The clutch must be in stop/not engaged position!**

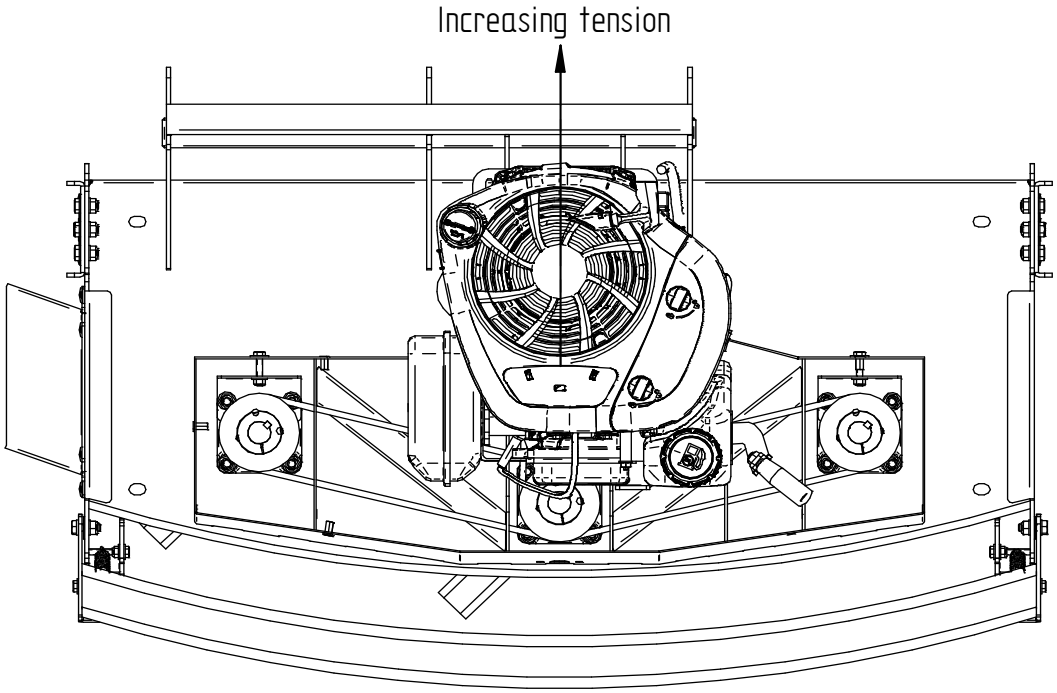

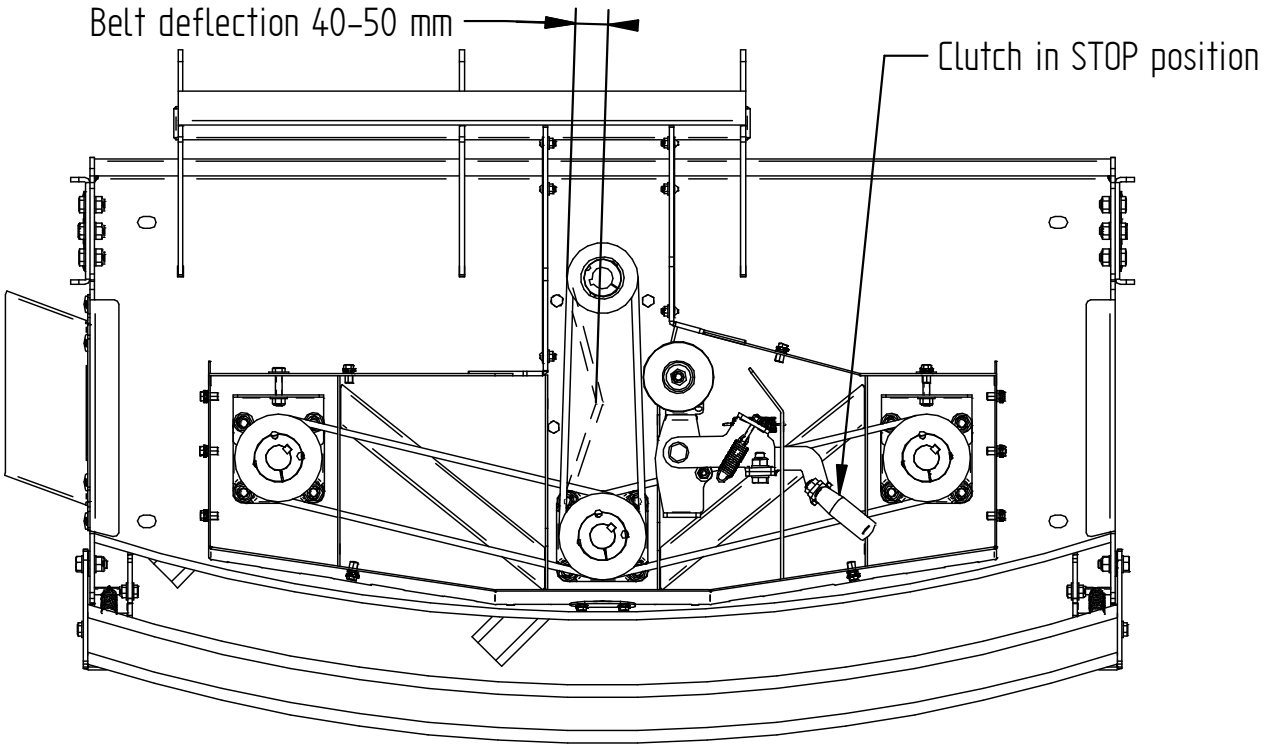

**** Some components removed for better visibility.***

Attention!
!! Take care to prevent fingers from being caught between the belt and ider pulley !!

Step 9 Fasten the engine holding bolts to 25 Nm.

Step 10 Re-install belt drive cover and fasten the bolts to 10 Nm.

STORAGE

The front cutter should be stored in a clean, dry area and free of pests and animals.

Pre-use check must be carried out after storage and before using the machine again (see page 13). Otherwise, corrosion developed during storage may not be noticed when the machine is put into service. Parts of the machine may have rusted/jammed, rubber parts and oils/greases have degraded during storage period.

DISMOUNTING THE EQUIPMENT

1. Place the vehicle on an even surface, set the parking brake, stop the engine, and remove the ignition key in order to avoid an accidental start.
2. Lower the accessory to the ground.
3. Unhook the winch hook and remove the winch rope.
4. Unhook pins from the bottom of the vehicle.
5. Remove the vehicle.

STORAGE PROCESSES

1. Drain the fuel tank completely. Stale fuel has high gum content and can clog the carburetor and restrict fuel flow.
2. Start the engine and allow it to run until it stops. This ensures no fuel is left in the carburetor and helps prevent deposits from forming inside, which can damage the engine.
3. Drain the oil from the engine while it is still warm. Refill with fresh oil of the grade recommended in the engine manual.
4. Allow the engine to cool. Remove the spark plug and put high-quality engine oil into the cylinder. Pull the starter rope slowly to distribute the oil. Replace the spark plug.
5. Clean the front cutter and the mounting frame thoroughly.
6. Mark all parts that are to be replaced in the next season. Contact your dealer to order replacement parts.
7. Follow the instructions given in the chapter concerning greasing (see page 7).
8. Follow the instructions given in the engine's user manual.
9. Store the front cutter and the mounting frame in a dry building with good ventilation.

STORAGE HAZARDS

1. Rodents might be present in the place where the machine is stored. They may chew through the wires, causing the machine to malfunction.
2. Improperly stored front cutter may get damaged. Heavy products or objects should not be placed on top of it.
3. The front cutter should not be stored on objects/shelves/floors/grounds that are not sufficiently load-bearing/sturdy. This may cause machine to move or roll.
4. Never store the front cutter outdoors. Outdoor conditions can damage the machine, leading to failure when the machine is put into service.

Remove the spark plug and drain all oil from the cylinder before attempting to start the unit after storage.

Do not store your front cutter with fuel in a non-ventilated area where fuel fumes could reach flames, sparks, pilot lights or any ignition sources.

Use only approved fuel containers.

TROUBLESHOOTING

Stop the front cutter immediately if any trouble occurs. The inspection must not commence until the moving parts of the front cutter (especially the blades) have fully stopped. If the trouble has not been identified, please contact the retailer or manufacturer. Be sure to inform them of the detailed malfunctions and unit model.

Troubleshooting and repairs of the machine must be carried out by qualified operators/professionals.

Trouble	Possible cause	Solution
The front cutter will not start	1) Lack of fuel 2) Faulty spark plug 3) Clogged air filter 4) Failure of fuel pump 5) Blocked fuel line 6) Choke lever is not in CLOSE position 7) Engine flooding	1) Fill the fuel tank 2) Replace the spark plug 3) Clean the air filter 4) Replace the fuel pump 5) Clean fuel line 6) Choke level must be in CLOSE position for a cold start 7) Wait a yew minutes to restart, but do not prime
The clutch does not engage	1) Broken V-belts 2) Weak or broken clutch springs 3) Bolt connections have come loose	1) Replace V-belts 2) Tigthen springs or replace 3) Re-tighten bolts
The front cutter vibrates excessively	1) Loose or damaged bolted connections 2) Engine issues 3) Machine is out of balance	1) Replace or tighten bolted connections 2) Check the engine, if need replace it 3) Clean machine, remove obstructions
Transmission shafts do not rotate as intended	1) Shafts are blocked 2) Insufficient lubrication 3) Broken bearing 4) Slipping or breaking of belts	1) Remove obstructions 2) Lubricate bearings 3) Replace bearings 4) Tigthen or replace belts
Front guard does not swivel as intended	1) Broken springs 2) Broken bolt connections 3) Damaged components	1) Replace springs 2) Replace bolts 3) Replace components
Roller does not rotate	1) Bearing damage 2) Stuck or damaged roller	1) Replace bearings 2) Remove obstructions, replace if necessary
The cut is inconsistent	1) Blades are in poor phyiscal condition 2) Blade attachments parts damaged 3) Blade are full on cutting debris 4) Dischage chute blocked	1) Replace or turn blades around 2) Replace parts if need 3) Clean debris 4) Clean dischage chute
Transmission shafts misalignment	1) Over tightened belts 2) Bent or twisted shaft	1) Check the belts tension 2) Check the shaft condition, replace if necessary
The belts frays or rolls over the pulley	1) Pulley groove may be nicked 2) Pulleys may be misaligned (see page 32) 3) Drive belts may be stretched	1) Check drive belts for wear and hard spots. File off any nicks on the pulley 2) Adjust pulleys 3) Replace or tighten drive belts

UTILIZATION AND DISPOSAL

Attention!
!! Failure to comply with disposal requirements may result in damages to the environment and injuries to operators and other nearby persons !!

NB! Personal protective equipment must be used during the utilization process!

The manufacturer or retailer can be contacted for instructions about utilization and disposal of the machine.

1. Before disposal, the machine must be switched off and precautions be taken so it cannot be restarted. The machine must be secured and must not move, shift or fall during the utilization process.
2. Utilization and dismantling of the machine and product must not start immediately after it has been switched off. Parts and any fluids must be allowed to cool off (Min 1hr after last used).
3. The machine may leak operating liquids retained inside the engine. We recommend safely draining the operating fluids to prevent spills during dismantling. For more information, refer to the engine's instruction manual.
4. Proper disposal of operating fluids is important to prevent environmental damage. Please follow the guidelines below:

- Ensure disposal is in accordance with legal requirements.
- Contact your local recycling company for further information on environmental aspects and recycling instructions. When possible, arrange for pickup and recycling by a specialized company
- End-of-life treatment must comply with both international and local regulations.

5. Disposal rules and laws may vary from country to country, so make sure you are aware of the correct procedures and requirements before disposing of your equipment. Disposal must comply with national requirements, regulations, and laws.
6. Incorrect utilization procedures can result in unnecessary fines and legal consequences.
7. All utilization operations must be conducted in a well-lit and ventilated environment. Additional lighting and ventilation equipment must be used if necessary.
8. Lifting and transport operations (see pages 15 and 16) necessary during utilization shall be carried out in accordance with the points set out in respective and relevant chapters.
9. All parts must be separated by material and taken to the appropriate recycling point.
10. Handling dangerous chemicals and waste operating fluids must be done with care. All applicable national laws, regulations and relevant safety precautions must be followed.
11. The manufacturer recommends recycling the packaging as it preserves raw materials and reduces waste being landfilled.

SPECIFICATION

Attention!
!! An ATV winch is required for the installation of the front cutter !!

Pos.	Description	Code	Amount
1	Front cutter frame	92.1000S	1
2	Tube frame	92.1026K	1
3	Mounting frame	92.1100	1
4	Conical pin	92.1109K	2
5	Pin 10x40 DIN1444	14.003	2
6	Cotter pin 2 mm DIN11024	OT.07.01.010	2
7	Cotter pin 3 mm DIN11024	OT.07.01.020	2
8	Carriage bolt M10x25 DIN603	OT.02.05.105	4
9	Washer Ø10 DIN125	OT.04.01.040	4
10	Nyloc nut M10 DIN985	OT.03.02.050	4

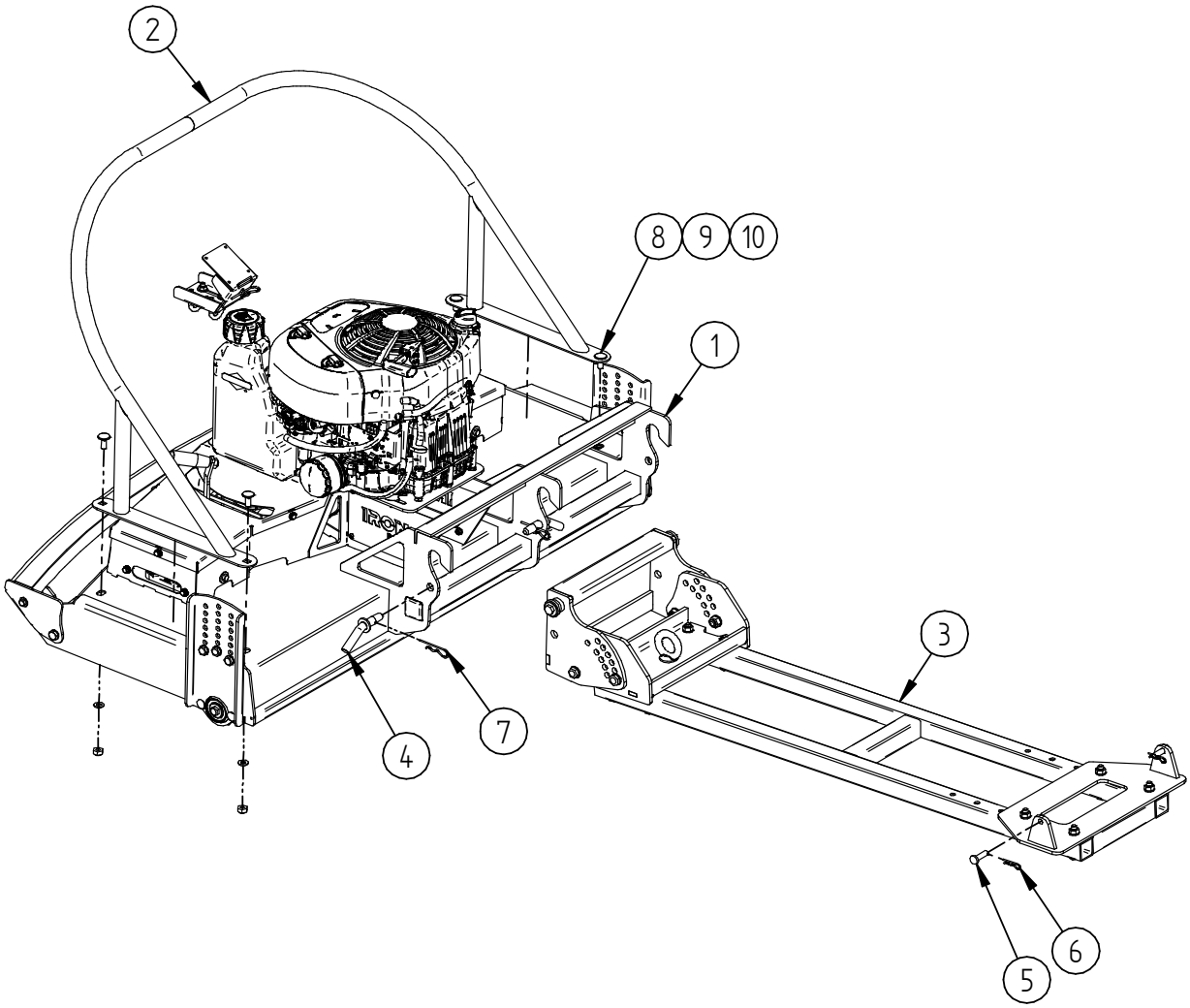

TOOLS REQUIRED FOR INSTALLATION:

- Spanner 17 mm
- Socket wrench 17 mm

FRONT CUTTER ASSEMBLING GUIDE

Carefully unpack the front cutter using scissors or a knife to cut and remove the straps. Use high-quality lifting slings to lift up the front cutter (see page 15).
NB! Personal protective equipment must be used while removing the packaging.

Step 1

Install the tube frame (Pos.2) to the front cutter frame (Pos.1). For fastening use M10x25 carriage bolts (Pos.8), Ø10 mm washers (Pos.9) and M10 nyloc nuts (Pos.10). Tighten to 17 Nm.

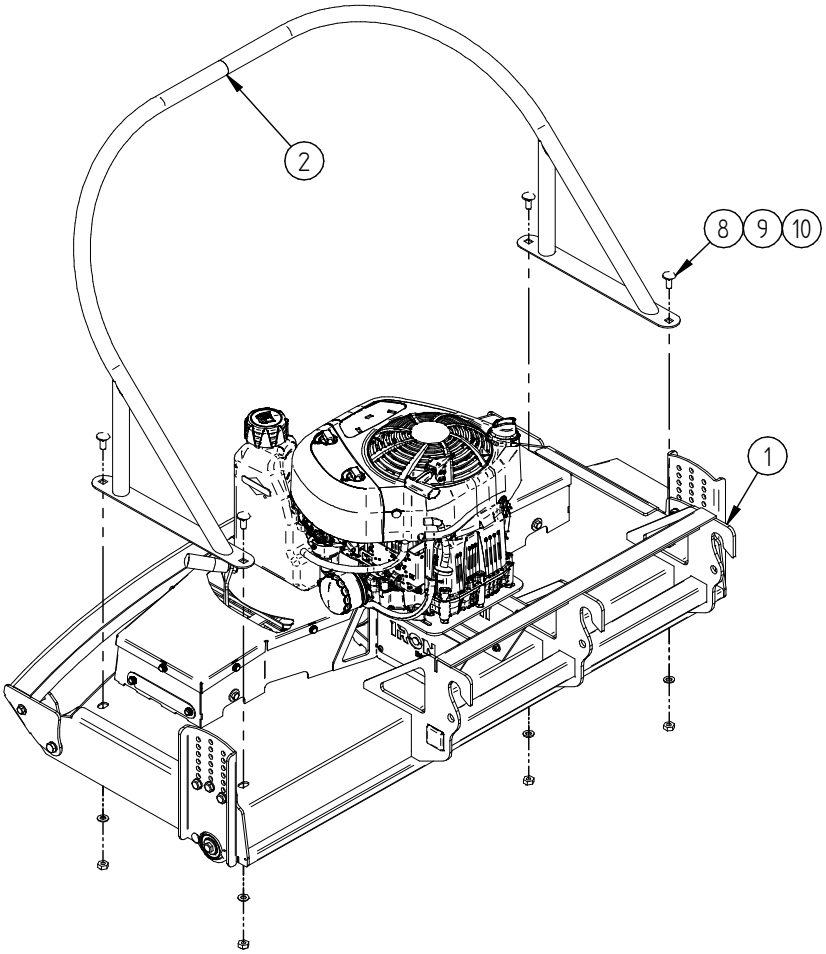

Step 2

Install the mounting frame assembly (Pos.3) to the mid-mount adapter under the bottom of the ATV. Use 10x40 pins (Pos.5) and Ø2 mm cotter pins (Pos.6) to secure mounting frame assembly in place.

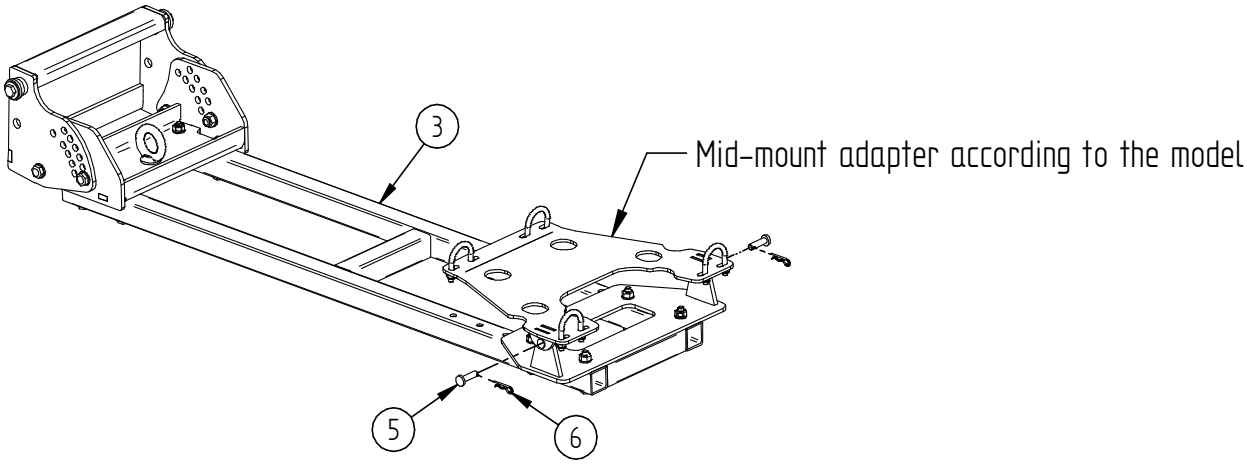

Step 3 Attach the winch rope for lifting the front cutter.

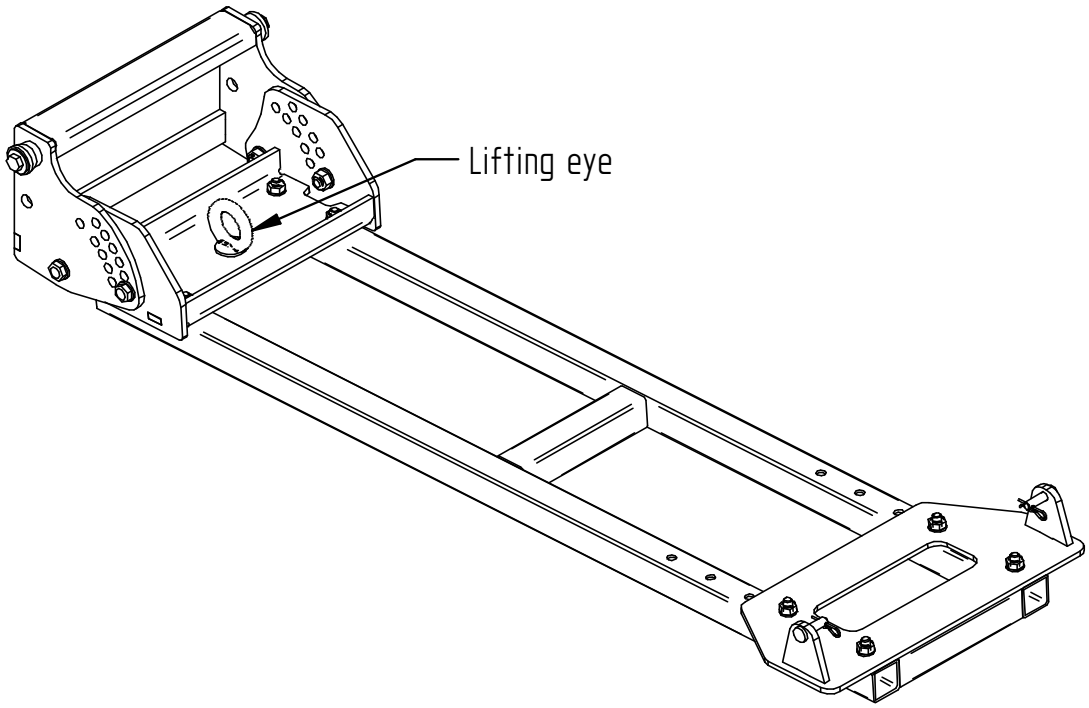

Step 4 Drive the ATV close to the front cutter frame (Pos.1) and hook the front cutter. Use conical pins (Pos.4) and Ø3 mm cotter pins (Pos.7) to secure front cutter in place.

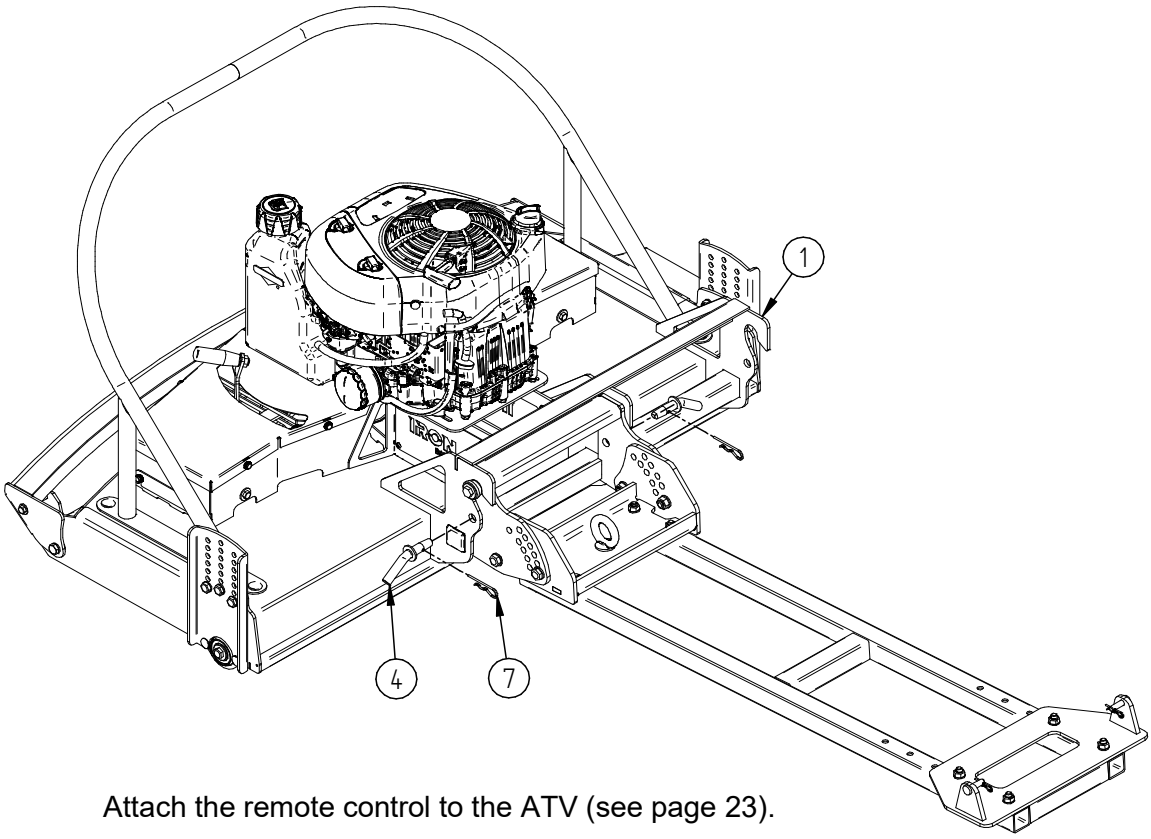

Step 5 Attach the remote control to the ATV (see page 23).

Step 6 You are now ready to use the front cutter!

!! Attention !!

After first hour of operation:

- Check the belt tension between the engine and the drive shaft and adjust if needed.
- Check that all fasteners are secure.

FRONT CUTTER ASSEMBLY

Code: 92.1000S

Pos.	Description	Code	Amount
1	Body assembly	92.1001S	1
2	Roller	92.1031K	1
3	Roller plate	92.1033	2
4	Front protection	92.1034K	1
5	Long transmission shaft	92.1038K	1
6	Short transmission shaft	92.1040K	2
7	Blade holder	92.1041K	3
8	Bearing cover	92.1044	3
9	Blade bushing	92.1045	6
10	Clutch base plate	92.1046	1
11	Clutch fork	92.1047	1
12	Clutch lever	92.1048	1
13	Idler pulley bushing	92.1049	1
14	Tensioning plate	92.1050	2
15	Belt drive cover	92.1051S	1
16	Cover plate	92.1052	1
17	Discharge chute	92.1053	1
18	Side lubrication plate	92.1057	2
19	Front lubrication plate	92.1058	1
20	Drive belts inspection cover	92.1059	1
21	Guard plate 1	92.1060	1
22	Guard plate 2	92.1061	1
23	Remote control	92.1150	1
24	Distance bush Ø30 h30	36.3030	1
25	Engine Briggs & Stratton 3125EX	OT.12.02.051	1
26	Idler pulley	27.006	1
27	V-belt XPZ 925 (ContiTech)	OT.61.01.030	2
28	V-belt XPZ 1087 (ContiTech)	OT.61.01.021	2
29	V-belt pulley SPZ100-2 TB1610	OT.61.01.019	4
30	V-belt pulley SPZ80-2 TB1210	OT.50.00.010	1
31	Taper-lock bush 1610-30	OT.61.01.002	4
32	Taper-lock bush 1210-1"	OT.61.01.025	1
33	Bearing with flanges SBPFL205	OT.61.01.004	2
34	Bearing UCF 206 SKF	OT.31.00.016	6
35	Snap ring Ø30mm DIN471	OT.34.00.026	3
36	Blade	OT.61.01.022	6
37	Handle	OT.61.01.023	1
38	Spring 2x18x70	OT.61.01.024	1
39	Spring 2,5x18x63	OT.11.01.040	3
40	Parallel key 6,3x6,3x50	OT.34.00.023	1
41	Parallel key 8x7x27	92.1055	2
42	Parallel key 8x7x60	92.1056	1
43	Set screw M6x6 DIN913	OT.01.03.006	6
44	Eye bolt M5x40	OT.21.00.003	1
45	Carriage bolt M8x25 DIN603	OT.02.05.060	8
46	Bolt M6x16 ISO7380	OT.02.03.020	8
47	Bolt M6x16 DIN933	OT.02.02.050	17
48	Bolt M8x20 DIN933	OT.02.02.180	1

Pos.	Description	Code	Amount
49	Bolt M8x25 DIN933	OT.02.02.190	6
50	Bolt M8x40 DIN933	OT.02.02.220	6
51	Bolt M8x50 DIN933	OT.02.02.240	2
52	Bolt M8x60 DIN933	OT.02.02.250	2
53	Bolt M8x130 DIN931	OT.02.01.035	3
54	Bolt M10x20 DIN933	OT.02.02.310	2
55	Bolt M10x25 DIN933	OT.02.02.317	6
56	Bolt M10x30 DIN933	OT.02.02.320	3
57	Bolt M10x80 DIN931	OT.02.01.048	1
58	Bolt UNF 7/16 x 1"	OT.02.07.006	1
59	Bolt M12x40 DIN933	OT.02.02.410	6
60	Bolt M12x60 DIN931	OT.02.01.090	12
61	Bolt M12x110 DIN931	OT.02.01.125	1
62	Washer Ø5/10 DIN125	OT.04.01.010	1
63	Washer Ø6 Nord-Lock SP	OT.04.05.020	17
64	Washer Ø6/15 SFS3738	OT.04.03.020	8
65	Washer Ø8/20 SFS3738	OT.04.03.030	39
66	Washer Ø8 DIN9021	OT.04.02.040	6
67	Washer Ø10 DIN125	OT.04.01.040	19
68	Washer Ø10 DIN9021	OT.04.02.050	5
69	Washer Ø12 DIN125	OT.04.01.050	39
70	Washer Ø12 DIN9021	OT.04.02.060	1
71	Nut M8 DIN934	OT.03.01.030	3
72	Nyloc nut M5 DIN985	OT.03.02.020	1
73	Nyloc nut M6 DIN985	OT.03.02.030	8
74	Nyloc nut M8 DIN985	OT.03.02.040	28
75	Nyloc nut M10 DIN985	OT.03.02.050	11
76	Nyloc nut M12 DIN985	OT.03.02.060	19

TOOLS REQUIRED FOR INSTALLATION:

- External snap ring pliers
- Hex key 3 mm
- Hex key 4 mm
- Hex key 5 mm
- Spanner 8 mm
- Spanner 10 mm
- Spanner 13 mm
- Spanner 17 mm
- Spanner 19 mm
- Socket wrench 10 mm
- Socket wrench 13 mm
- Socket wrench 17 mm
- Socket wrench 19 mm

FRONT CUTTER ASSEMBLY

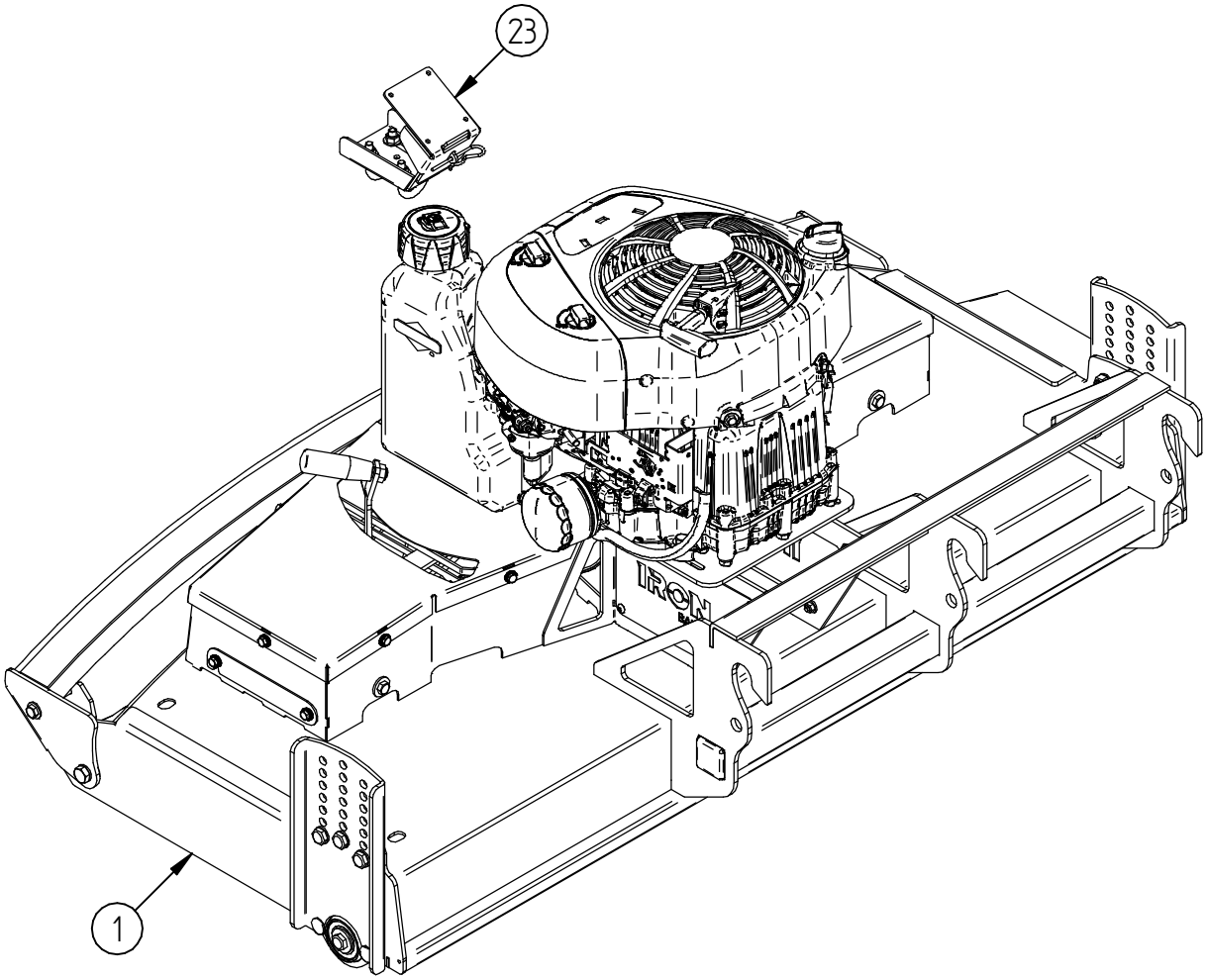

TRANSMISSION SHAFTS ASSEMBLY

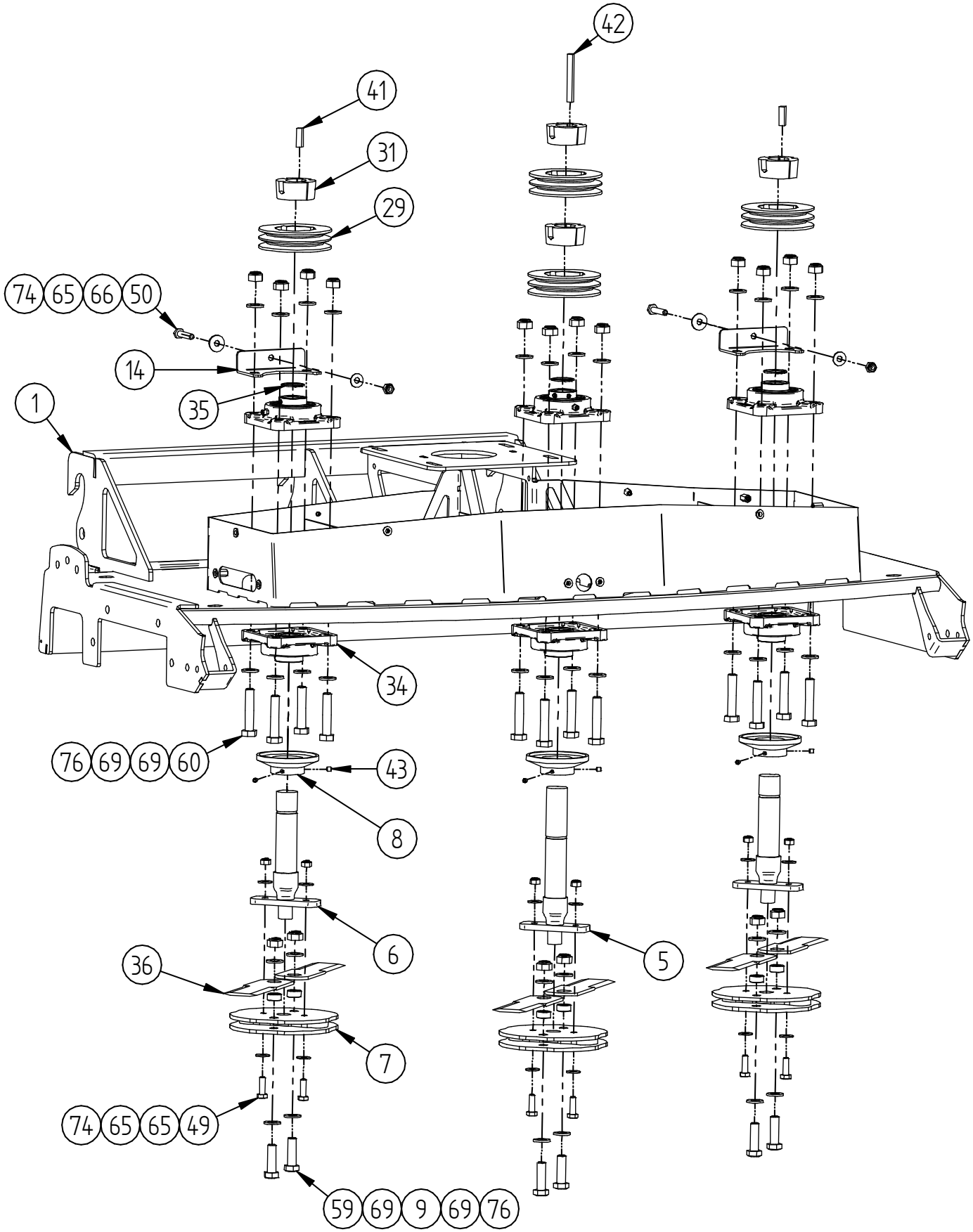

CLUTCH ASSEMBLY

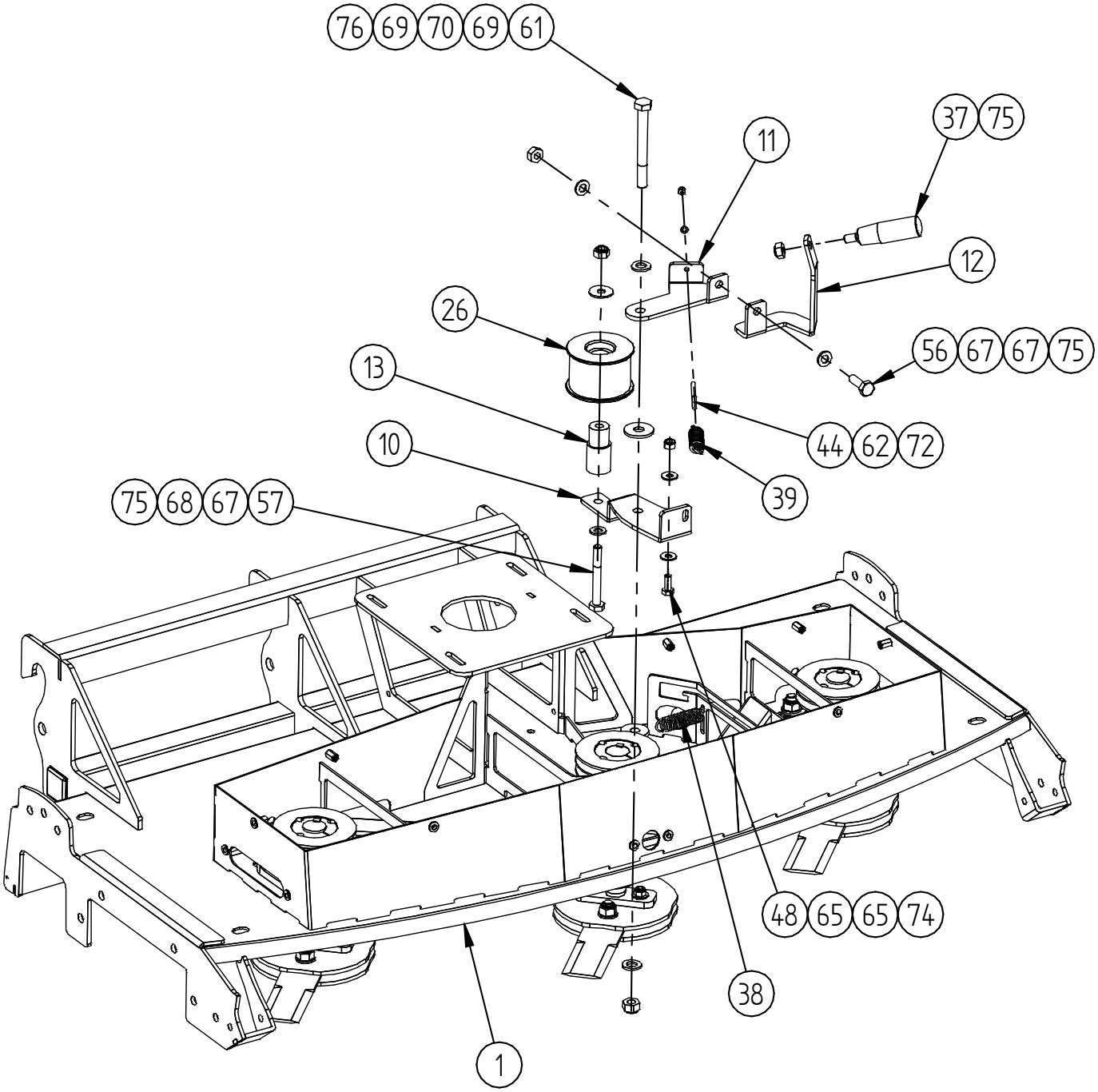

TRANSMISSION ASSEMBLY

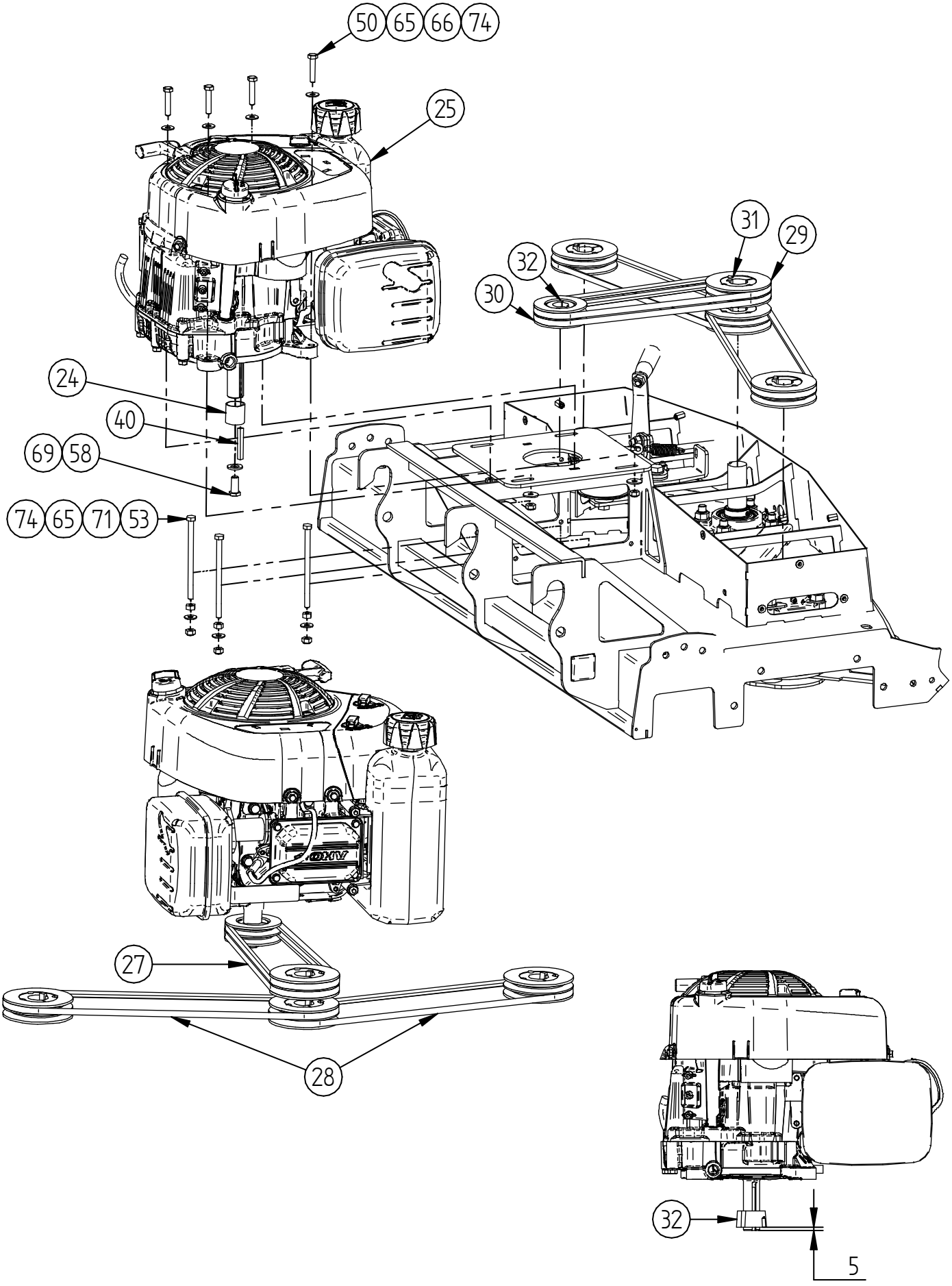

ROLLER ASSEMBLY

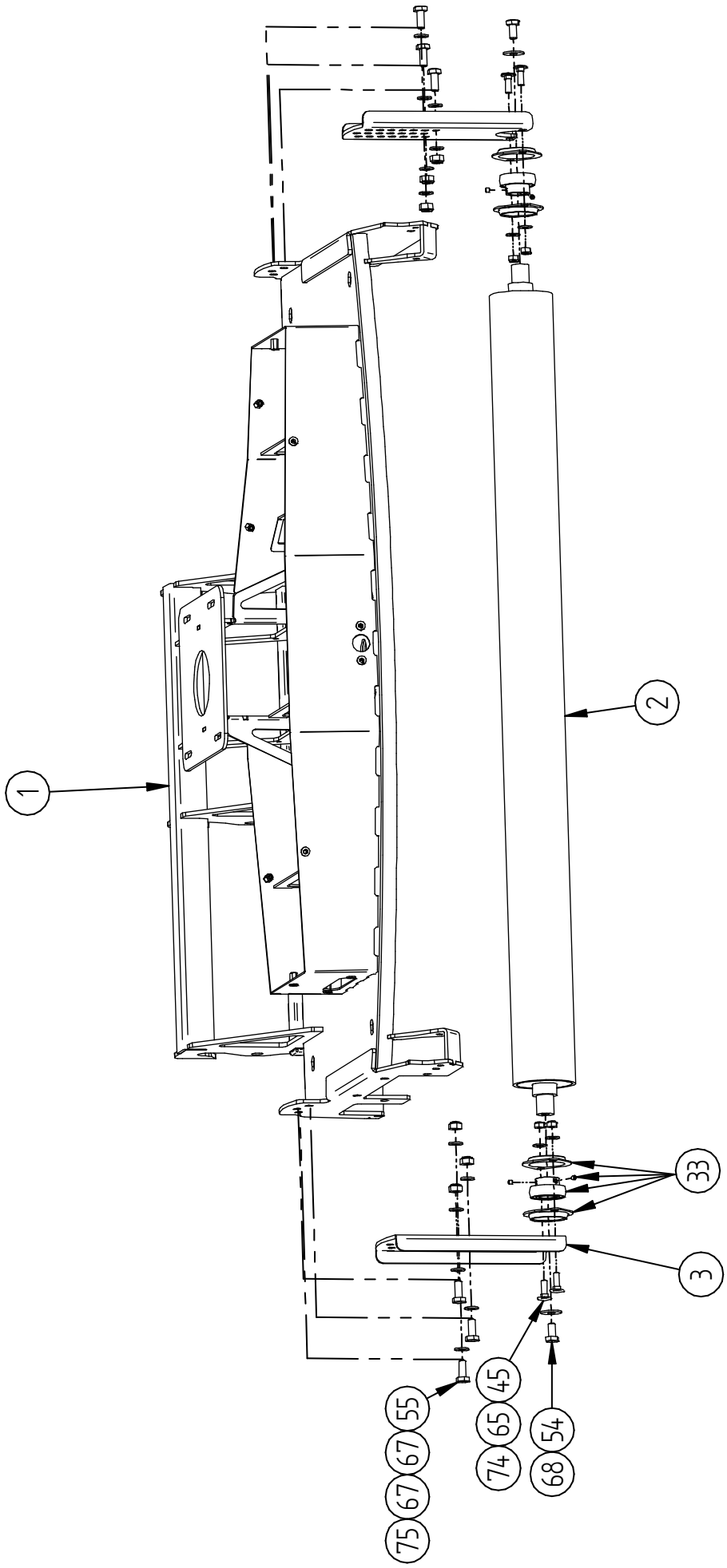

FRONT PROTECTION AND PLATES ASSEMBLY

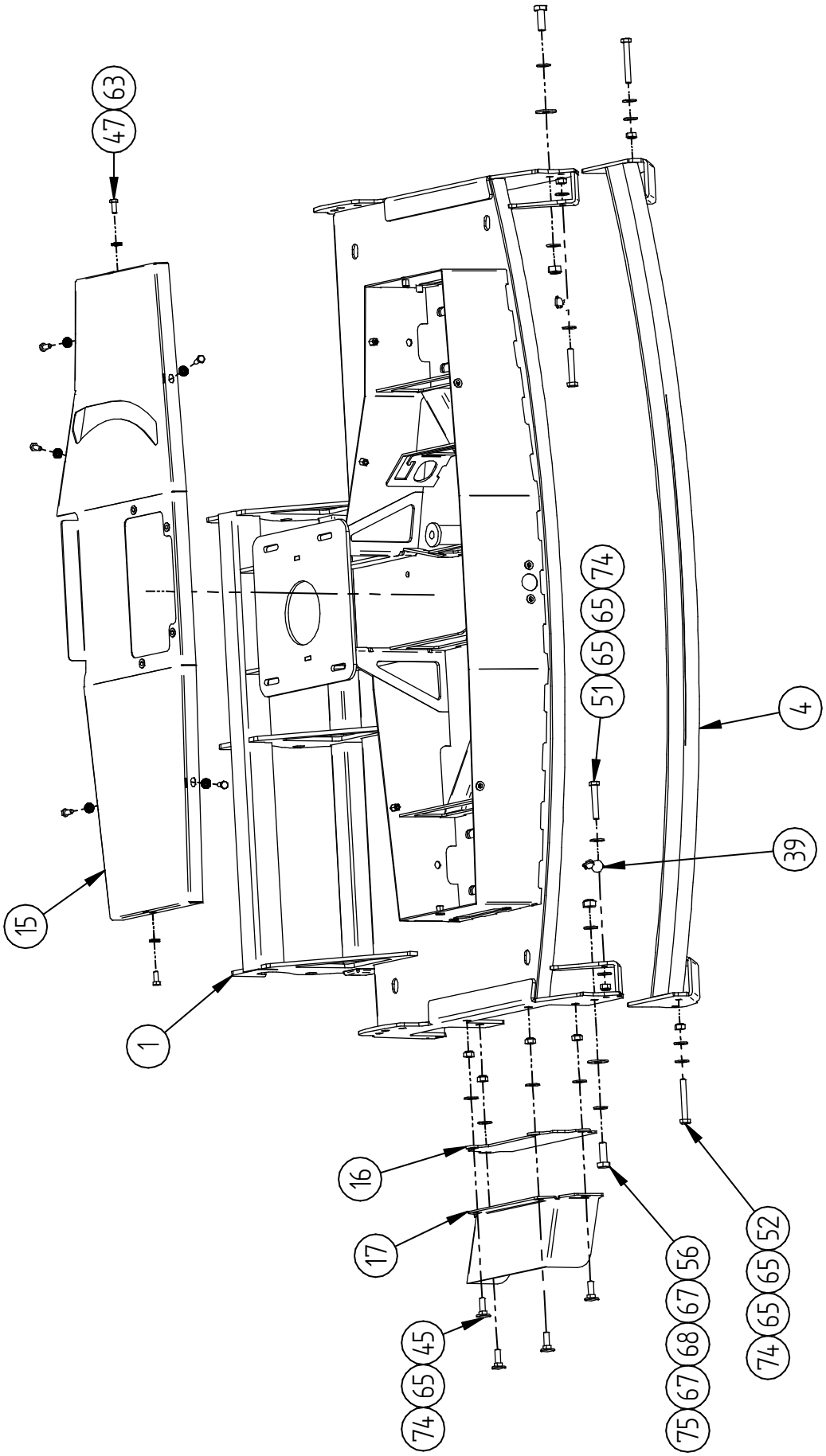

COVERS ASSEMBLY

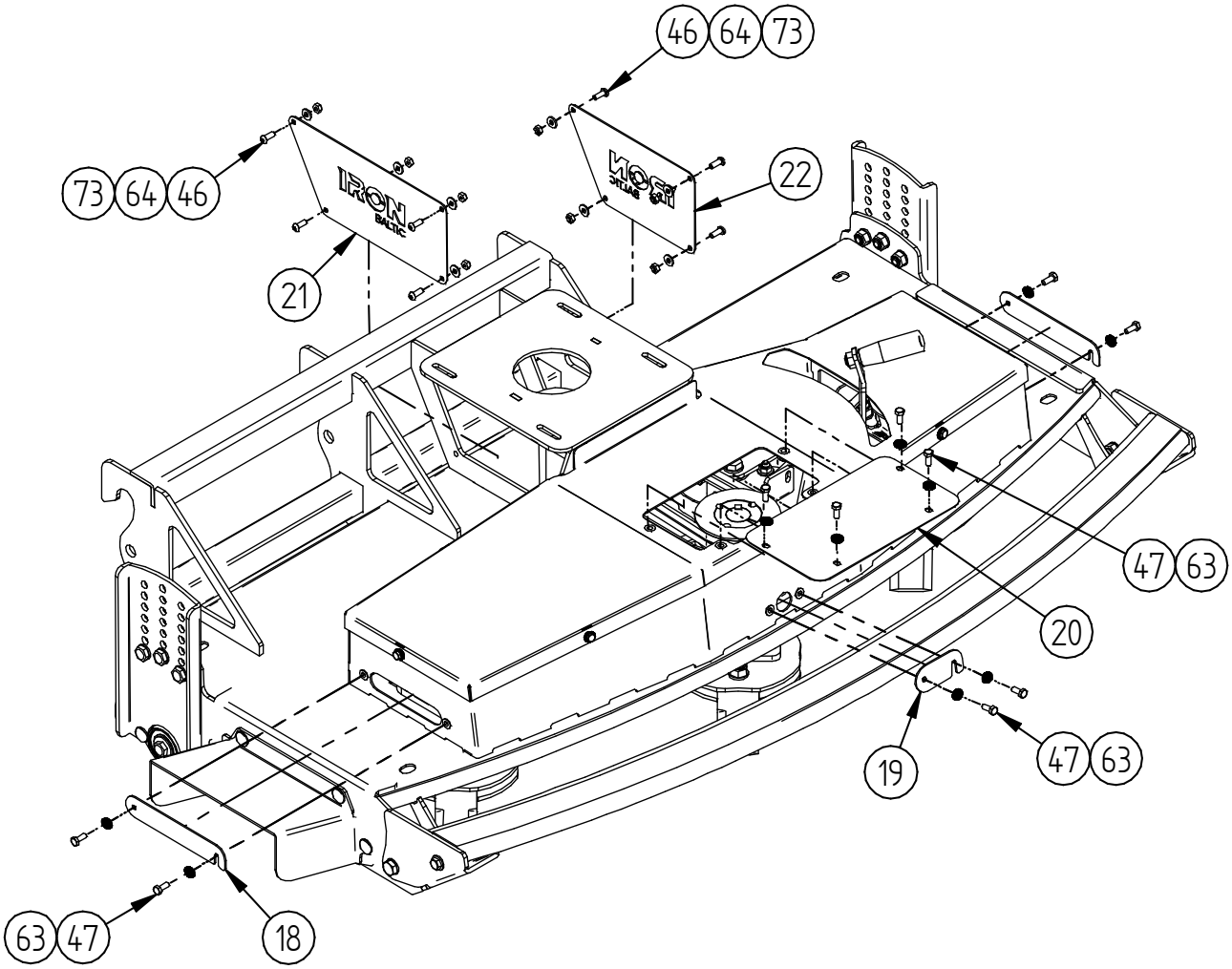

MOUNTING FRAME ASSEMBLY

Code: 92.1100

Pos.	Description	Code	Amount
1	Mounting adapter	87.1206K	1
2	Subframe	92.1101K	1
3	Angle adjustment adapter	92.1103K	1
4	Front-mount adapter	92.1105K	1
5	Adapter bushing	92.1108	2
6	Bushing	20.103	2
7	Lifting eye M16	OT.19.01.020	1
8	Bolt M10x45 DIN931	OT.02.01.040	2
9	Bolt M10x65 DIN931	OT.02.01.045	8
10	Bolt M12x35 DIN933	OT.02.02.400	4
11	Washer Ø10 NordLock	OT.04.05.030	8
12	Washer Ø10 DIN9021	OT.04.02.050	12
13	Washer Ø12 DIN125	OT.04.01.050	8
14	Washer Ø16 DIN125	OT.04.01.060	1
15	Nyloc nut M10 DIN985	OT.03.02.050	10
16	Nyloc nut M12 DIN985	OT.03.02.060	4
17	Nyloc nut M16 DIN985	OT.03.02.070	1

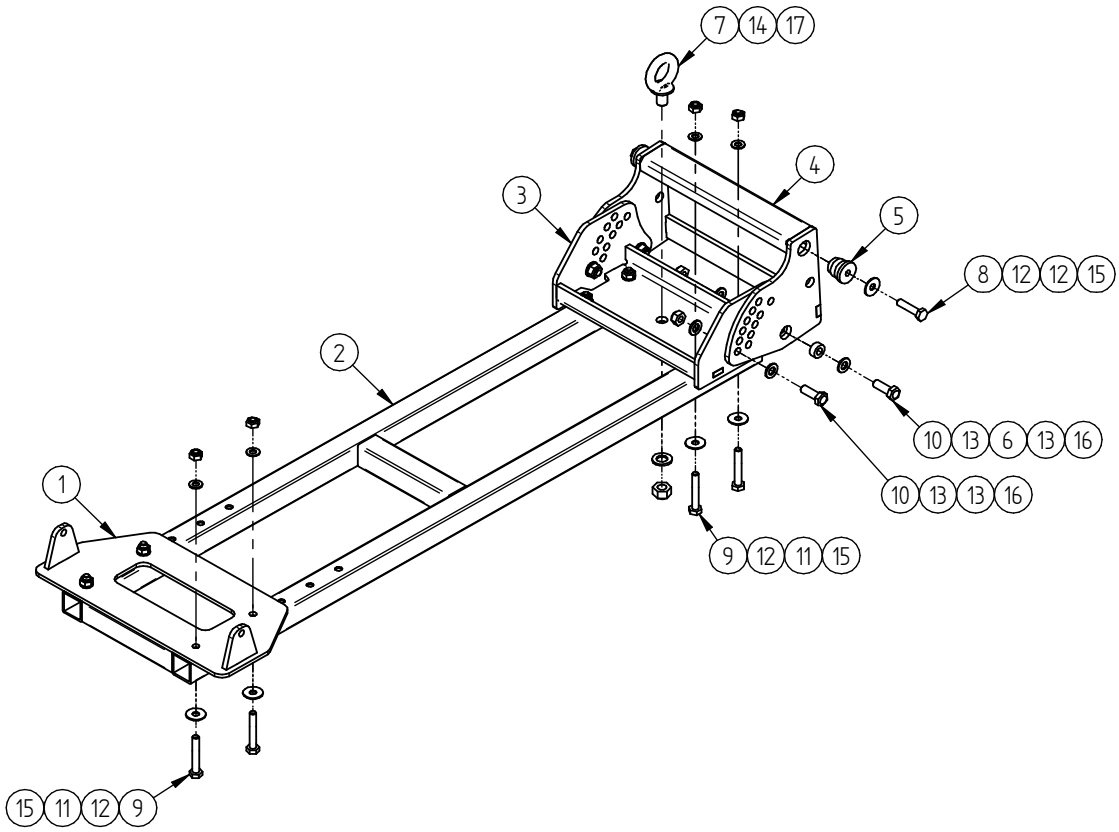

TOOLS REQUIRED FOR INSTALLATION:

- Spanner 17 mm
- Spanner 19 mm
- Socket wrench 17 mm
- Socket wrench 19 mm
- Socket wrench 24 mm

IRON BALTIC OÜ
Joa tee 17
Vääna 76903
Estonia / Europe

+372 6 533 711
sales@ironbaltic.com

www.ironbaltic.com
www.facebook.com/ironbaltic
www.youtube.com/user/ironbalticltd